APPENDIX A

HISTORIC PHOTOGRAPHS

PHOTO 1

<u>VIEW OF THE 1855 LIGHTHOUSE (c 1880s)</u>

Archives of the Grand Haven Lighthouse Conservancy

Grand Haven, Michigan

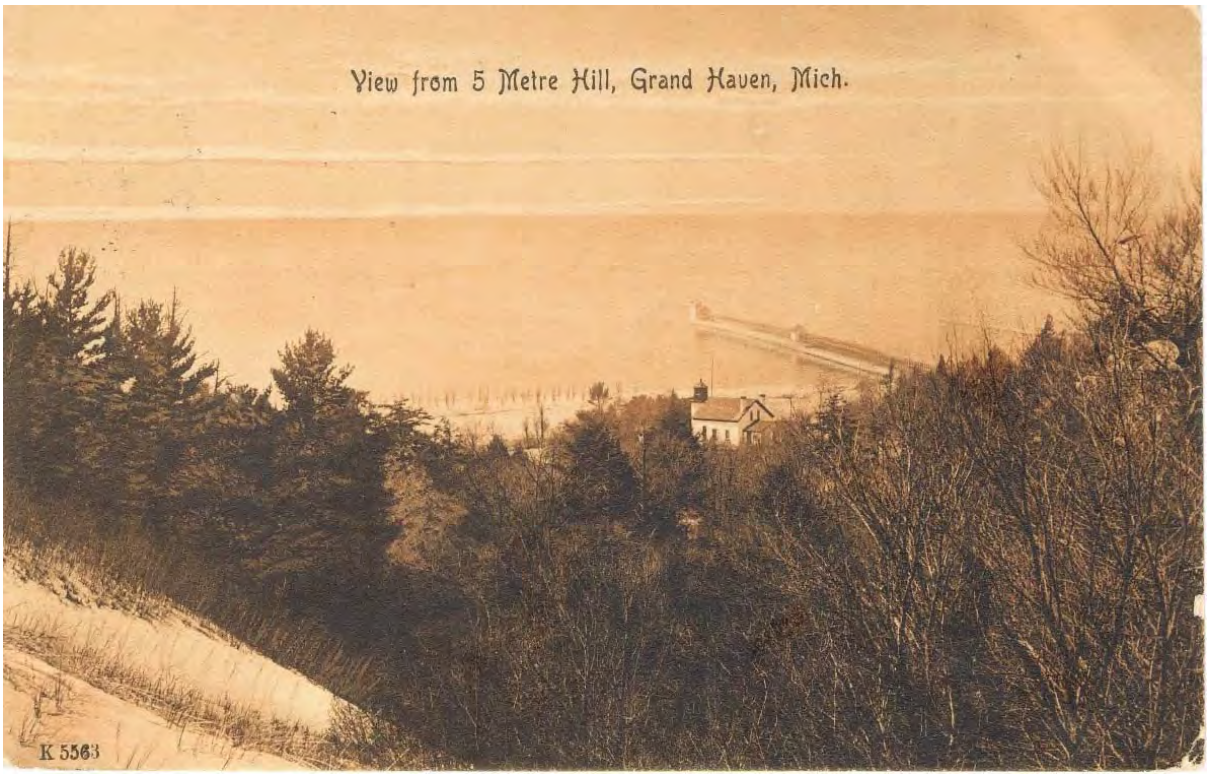

PHOTO 2

VIEW OF THE 1855 LIGHTHOUSE AND PIER (c 1880s)

Archives of the Grand Haven Lighthouse Conservancy

Grand Haven, Michigan

PHOTO 3

VIEW OF PIER, FOG SIGNAL BUILDING WITH SEPARATE LIGHT TOWER (c 1890s)

Archives of the Grand Haven Lighthouse Conservancy

Grand Haven, Michigan

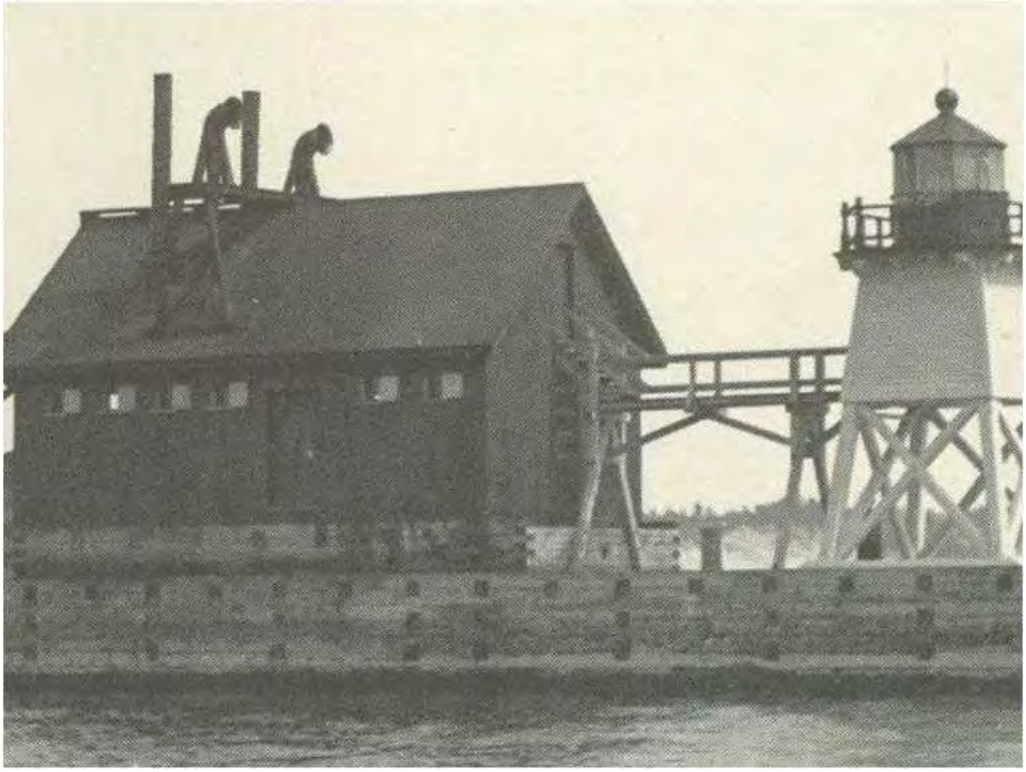

PHOTO 4

VIEW OF FOG SIGNAL BUILDING WITH SEPARATE LIGHT TOWER (c 1890s)

Archives of the Grand Haven Lighthouse Conservancy

Grand Haven, Michigan

PHOTO 5

PARTIAL VIEW OF THE FOG SIGNAL BUILDING AND

CYLINDRICAL TOWER AT WEST END OF PIER (c 1905 - 1906)

Archives of the Grand Haven Lighthouse Conservancy

Grand Haven, Michigan

PHOTO 6

VIEW OF THE INNER LIGHT RELOCATED

FROM WEST END OF THE PIER (c 1907)

Archives of the Grand Haven Lighthouse Conservancy

Grand Haven, Michigan

PHOTO 7

VIEW OF NORTH AND SOUTH PIERS AND REVETMENTS (c 1910s)

Archives of the Grand Haven Lighthouse Conservancy

Grand Haven, Michigan

PHOTO 8

VIEW OF SOUTH PIER, INNER LIGHT AND WOOD CATWALK (c 1910s)

Archives of the Grand Haven Lighthouse Conservancy

Grand Haven, Michigan

PHOTO 9

VIEW OF FOG SIGNAL BUILDING WITH LANTERN (c 1910s)

United States Coast Guard

Historian's Office

Washington, D.C.

PHOTO 10

VIEW OF INNER LIGHT FROM CATWALK

WITH ENTRANCE LIGHT IN BACKGROUND (c 1910s)

Superior View Historic Photography

(Image # M-LGH-01)

Marquette, Michigan

PHOTO 11

VIEW OF THE NORTH AND SOUTH PIERS (c 1940s)

Archives of the Grand Haven Lighthouse Conservancy

Grand Haven, Michigan

PHOTO 12

VIEW OF INNER LIGHT, PIER AND CATWALK (c 1940s)

United States Coast Guard

Historian's Office

Washington, D.C.

PHOTO 13

VIEW OF INNER LIGHT WITH ENTRANCE LIGHT IN BACKGROUND (c 1950s)

Superior View Historic Photography

(Image #M-LGH-02)

Marquette, Michigan

PHOTO 14

VIEW OF PIER AND CATWALK WITH INNER AND ENTRANCE LIGHTS

IN BACKGROUND (c 1950s)

Archives of the Grand Haven Lighthouse Conservancy

Grand Haven, Michigan

APPENDIX B

ARCHIVAL DRAWINGS

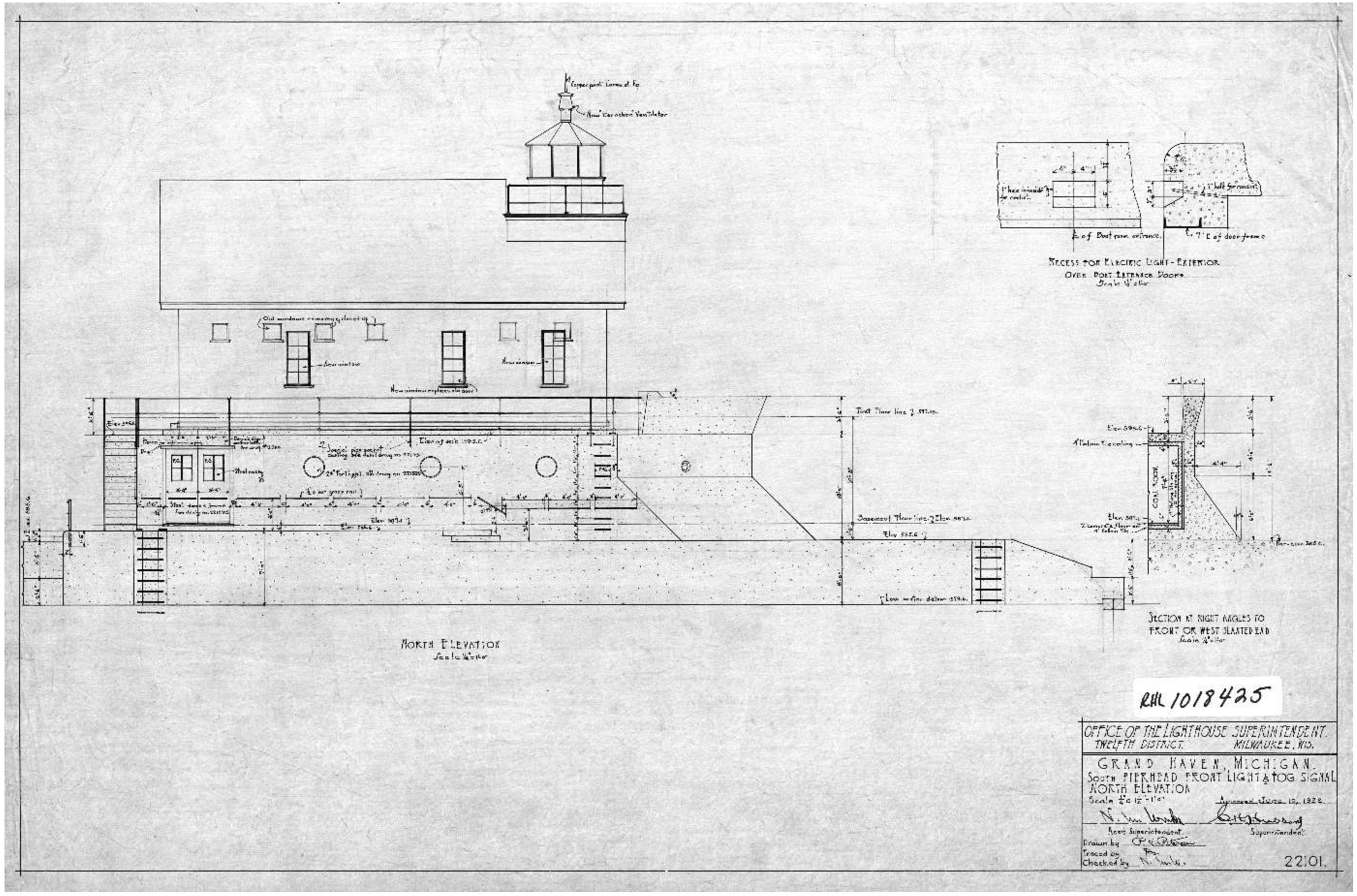

RHL 1018425

DRAWING #1 (1922)
ENTRANCE LIGHT

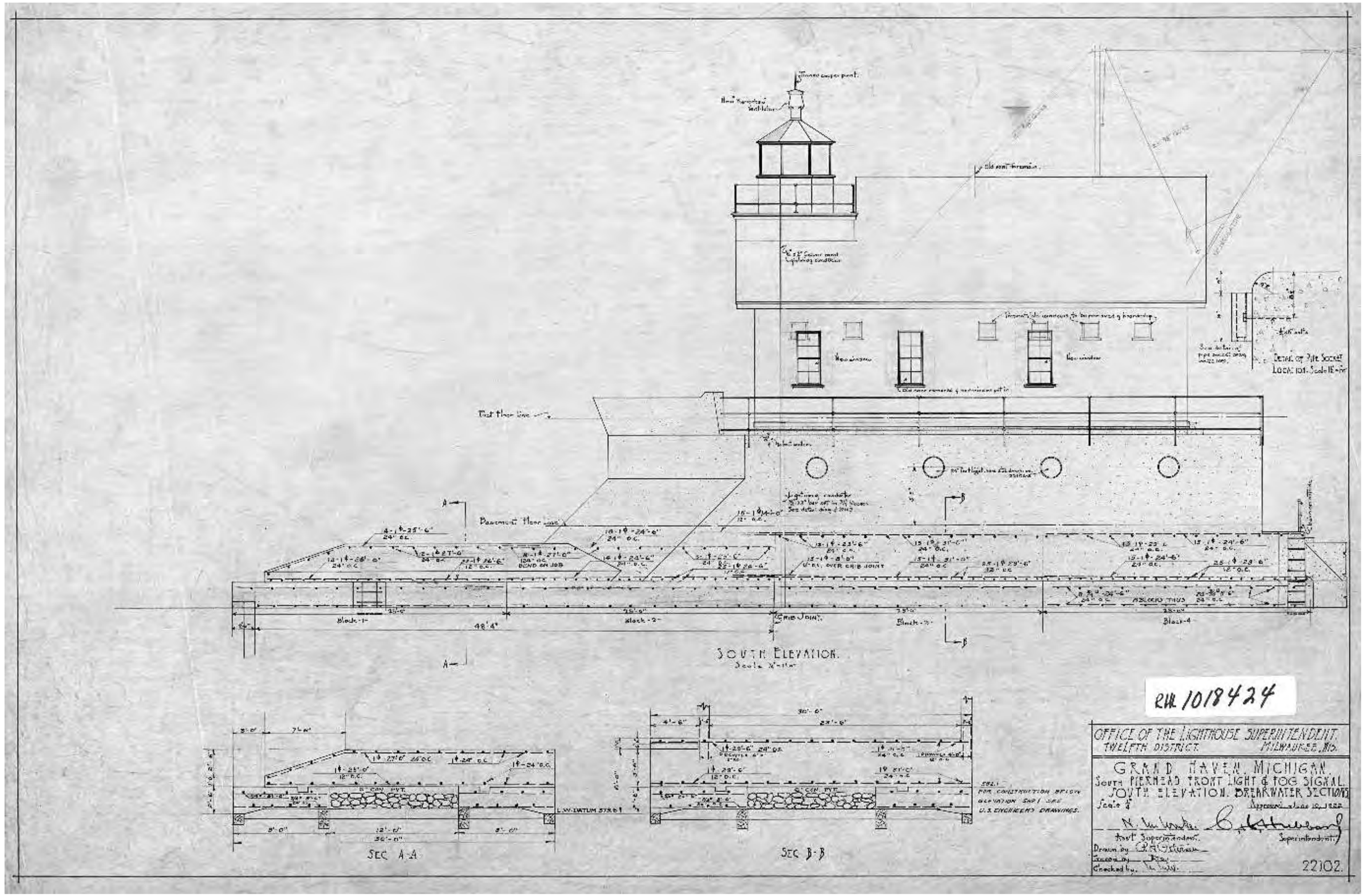

DRAWING #2 (1922)
ENTRANCE LIGHT

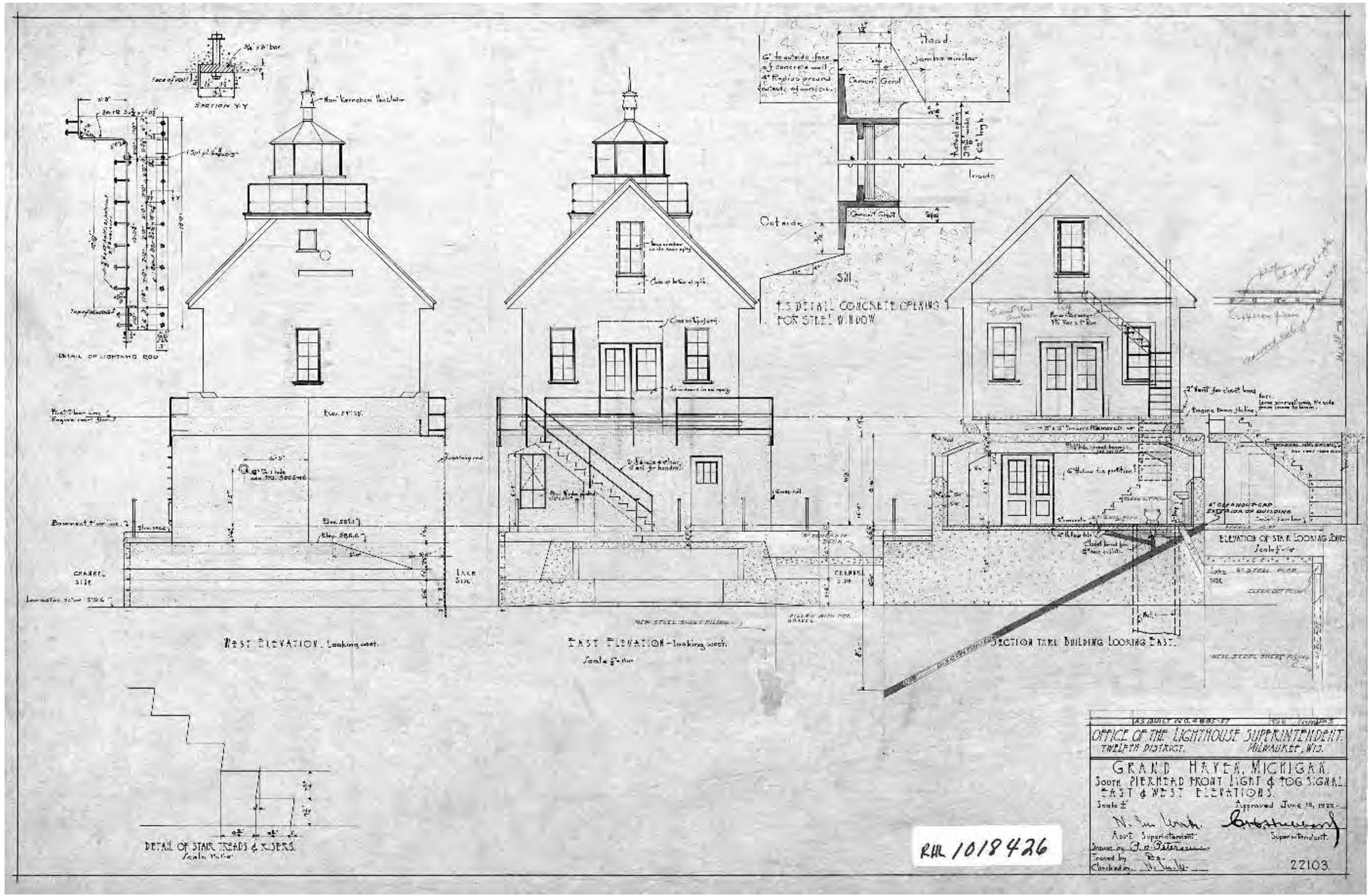

DRAWING #3 (1922)
ENTRANCE LIGHT

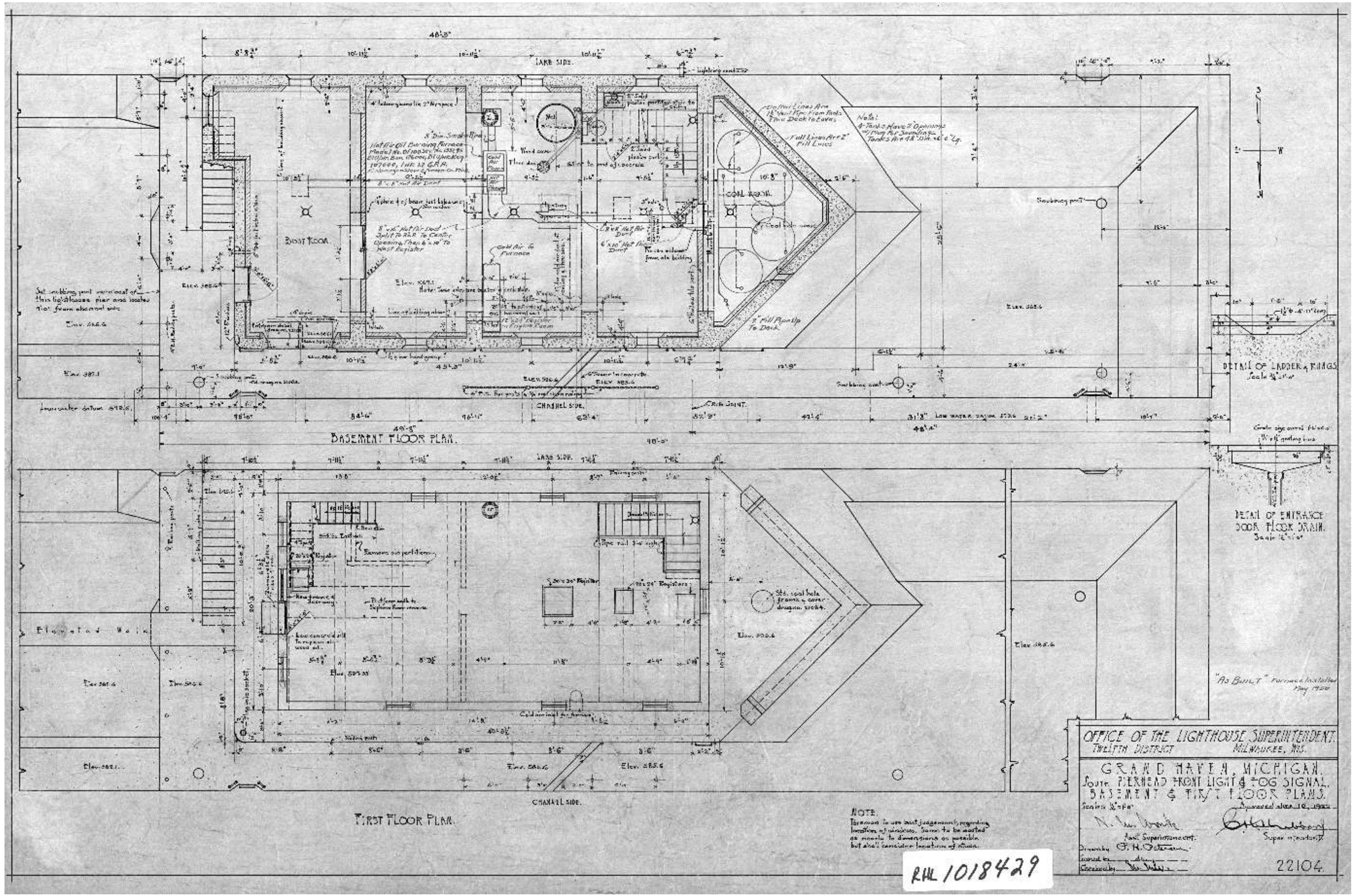

DRAWING #4 (1922)
ENTRANCE LIGHT

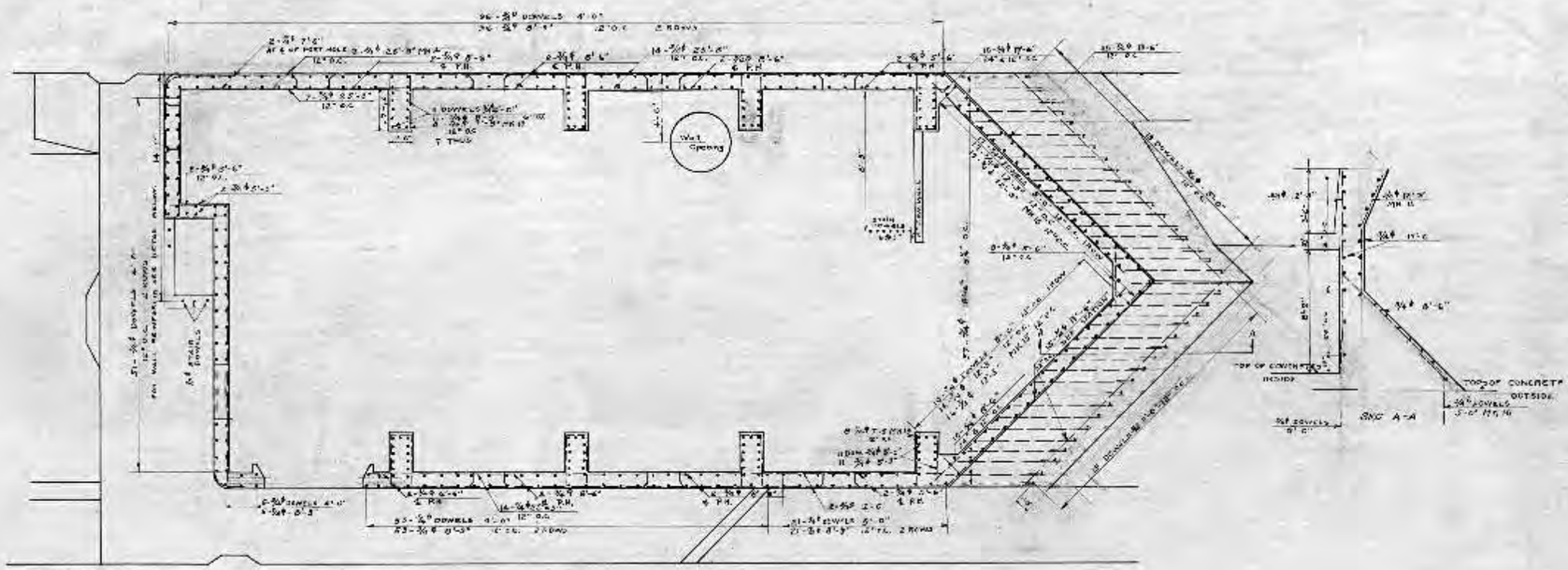

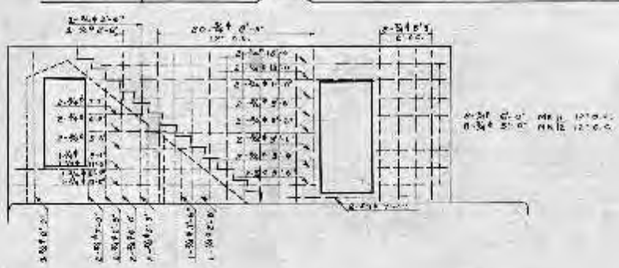

LIST-A-

STRAIGHT BARS.

NUMBER	SIZE	LENGTH	WEIGHT
50	1" ϕ	31'-0"	
93		29-6	
20		27-0	
35		24-6	
15		23-6	
15		23-0	
60		22-6	
15		14-0	
15		8-0	20553#
64	3/4" ϕ	24-6	
10		11-6	
14		10-0	
208		8-6	6870#
102	3/4" ϕ	5-0	
282		4-0	2460#
3	1/2" ϕ	2-3	5#

This list includes Breakwater reinforcing & dowels for building.

LIST-B-

BENT BARS

NUMBER	SIZE	LENGTH	MARK	WEIGHT	TYPE	A	B	C	D	E	F	G	H	K
8	1" ϕ	26'-0"	7		1		3'-6"	2'-0"	15'-0"	2'-0"	3'-6"		1'-5"	1'-5"
8		26'-0"	8		1		4'-3"	2'-0"	12'-6"	2'-0"	4'-3"		1'-5"	1'-5"
8		26'-0"	9		1		6'-0"	2'-0"	10'-0"	2'-0"	6'-0"		1'-5"	1'-5"
24		26'-6"	10	3300#	1			5'-6"	14'-6"	5'-6"			2'-5"	4'-10"
7	3/4" ϕ	28'-3"	14		2	1'-0"	1'-2"	24'-7"						
3		21'-3"	5		1		4'-4"	1'-4"	5'-6"	1'-4"	8'-9"		0'-8"	1'-2"
39		16'-6"	3		1		4'-2"	1'-4"	5'-6"	1'-4"	4'-2"		0'-8"	1'-2"
2		15'-0"	6		1	3'-0"	6'-0"							
18		13'-6"	1		1		2'-0"	1'-4"	5'-6"	1'-4"	4'-4"		0'-8"	1'-2"
35		12'-3"	15		1		3'-0"	3'-3"					1'-0"	3'-0"
3		9'-6"	4		1		4'-5"	1'-4"	3'-3"				0'-8"	1'-2"
64		7'-9"	13		3	3'-3"	1'-3"	3'-3"						
8		6'-0"	11		2	3'-0"	1'-2"	1'-10"						
8		5'-0"	12	334#	1	3'-0"	2'-0"							
232	1/2" ϕ	3'-6"	9	1412#			3/4 3'	3' 3/4						

EXTRA-STRAIGHT RODS FURNISHED.
10 - 3/4" ϕ - 20'-0"
9 - 3/4" ϕ - 24'-6"
10 - 1/2" ϕ - 20'-0"
These rods are included in List C.

LIST-C-

STRAIGHT BARS

NUMBER	SIZE	LENGTH	WEIGHT
4	3/4" ϕ	27'-6"	
35		25'-3"	
37		24'-6"	
3		20'-6"	
10		20'-0"	
6		18'-0"	
50		17'-6"	
2		14'-0"	
7		13'-0"	
18		12'-6"	
33		12'-3"	
6		11'-0"	
2		10'-6"	
3		10'-0"	
10		9'-6"	
2		9'-0"	
233		8'-9"	
51		8'-6"	
2		8'-3"	
2		7'-9"	
2		7'-6"	
2		7'-0"	
2		6'-9"	
6		6'-6"	
12		6'-0"	
18		5'-6"	
4		5'-3"	
8		5'-0"	
4		4'-6"	
2		4'-3"	
19		3'-6"	
2		3'-3"	
3		2'-6"	1285#
48	1/2" ϕ	29'-6"	
2		24'-0"	
2		22'-0"	
12		20'-0"	
12		19'-0"	
2		18'-0"	
3		16'-3"	
2		16'-0"	
2		15'-6"	
2		14'-0"	
7		12'-9"	
2		12'-0"	
12		11'-0"	
2		10'-0"	
7		8'-6"	
2		8'-0"	
6		6'-6"	
2		6'-0"	
7		5'-3"	
7		2'-3"	1812#
13	5/8" ϕ	3'-3"	
6		2'-9"	22#

OFFICE OF THE LIGHTHOUSE SUPERINTENDENT
TWELFTH DISTRICT MILWAUKEE, WIS.

GRAND HAVEN, MICHIGAN
SOUTH PIERHEAD FRONT LIGHT & FOG SIGNAL
REINFORCING - BASIN WALLS & BUTTRESSES - BAR SCHEDULE
Scale 1/4" = 1'-0" Approved June 7, 1922

Asst. Superintendent Superintendent

Drawn by
Traced by Date
Checked by

22105

RHL 1018430

DRAWING #5 (1922)
ENTRANCE LIGHT

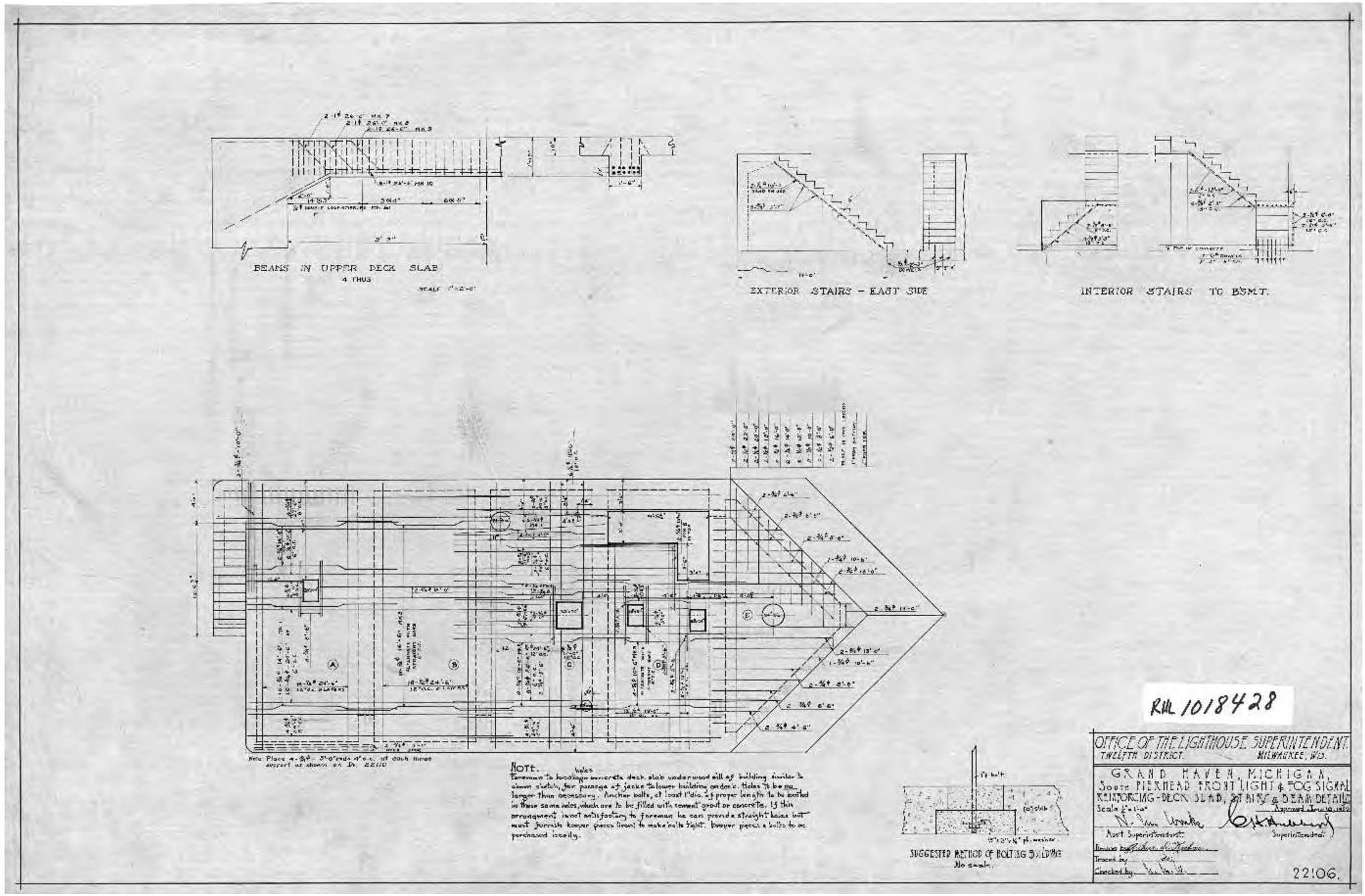

DRAWING #6 (1922)
ENTRANCE LIGHT

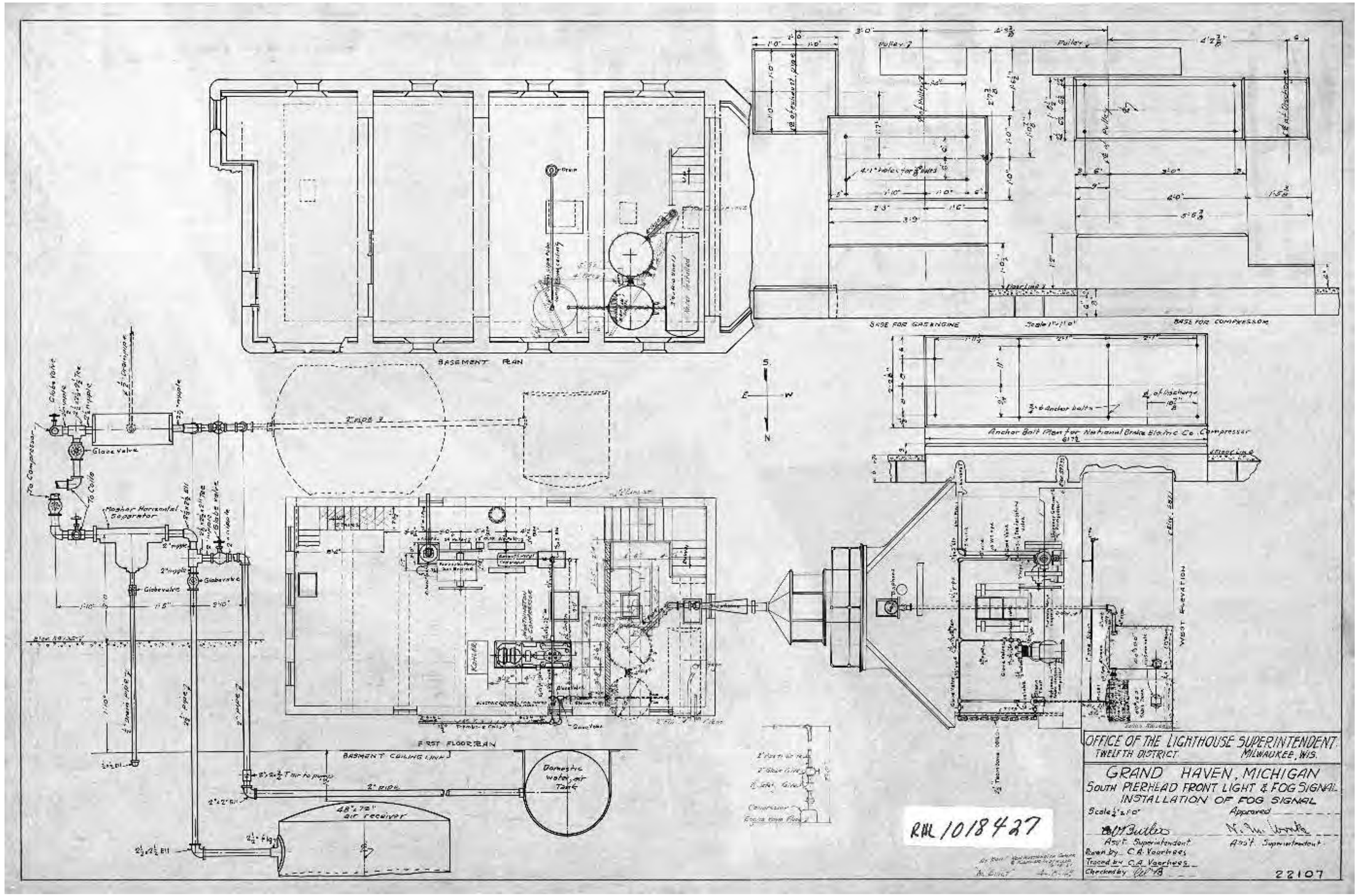

DRAWING #7 (1922)
ENTRANCE LIGHT

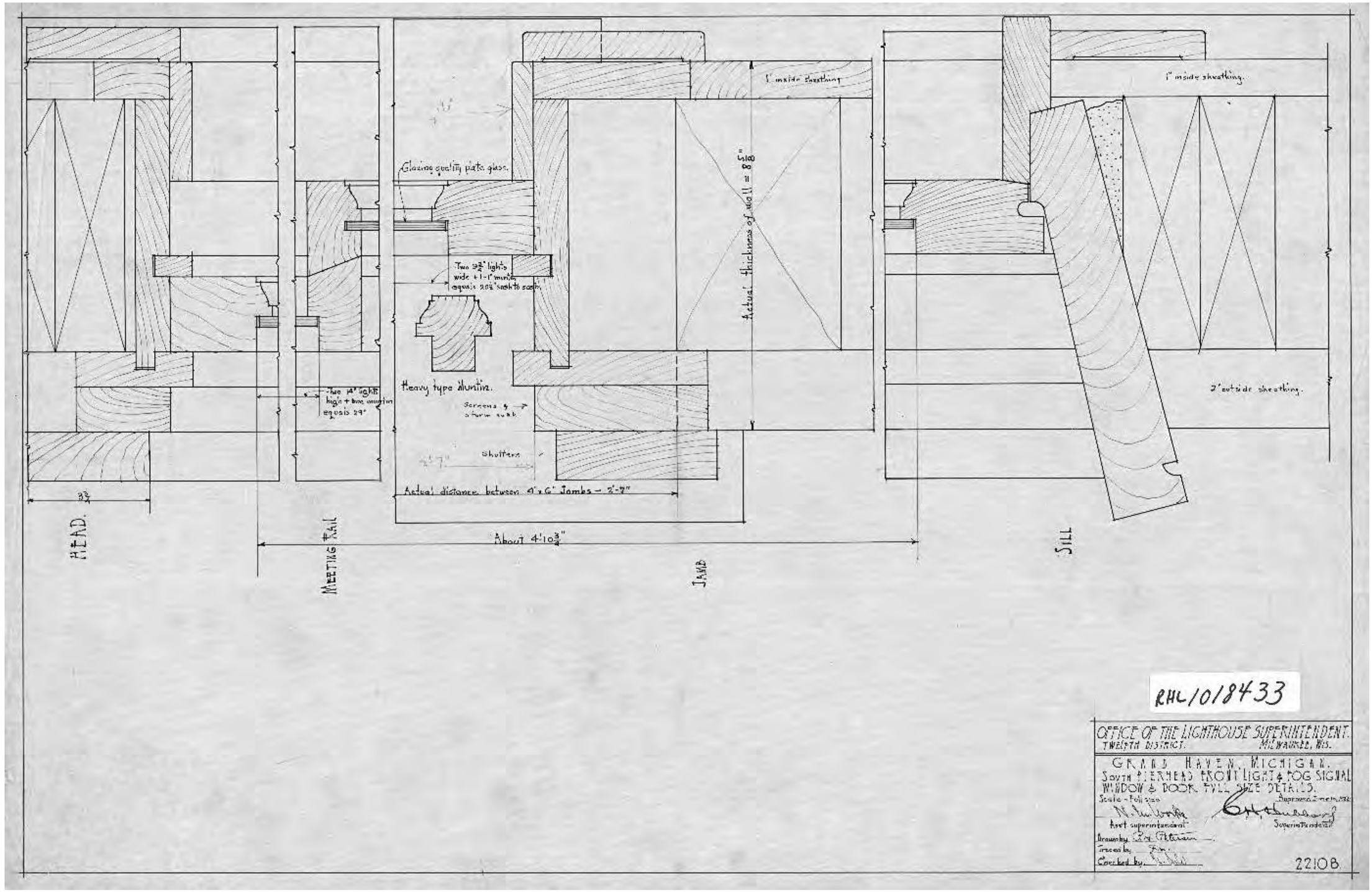

DRAWING #8 (1922)
ENTRANCE LIGHT

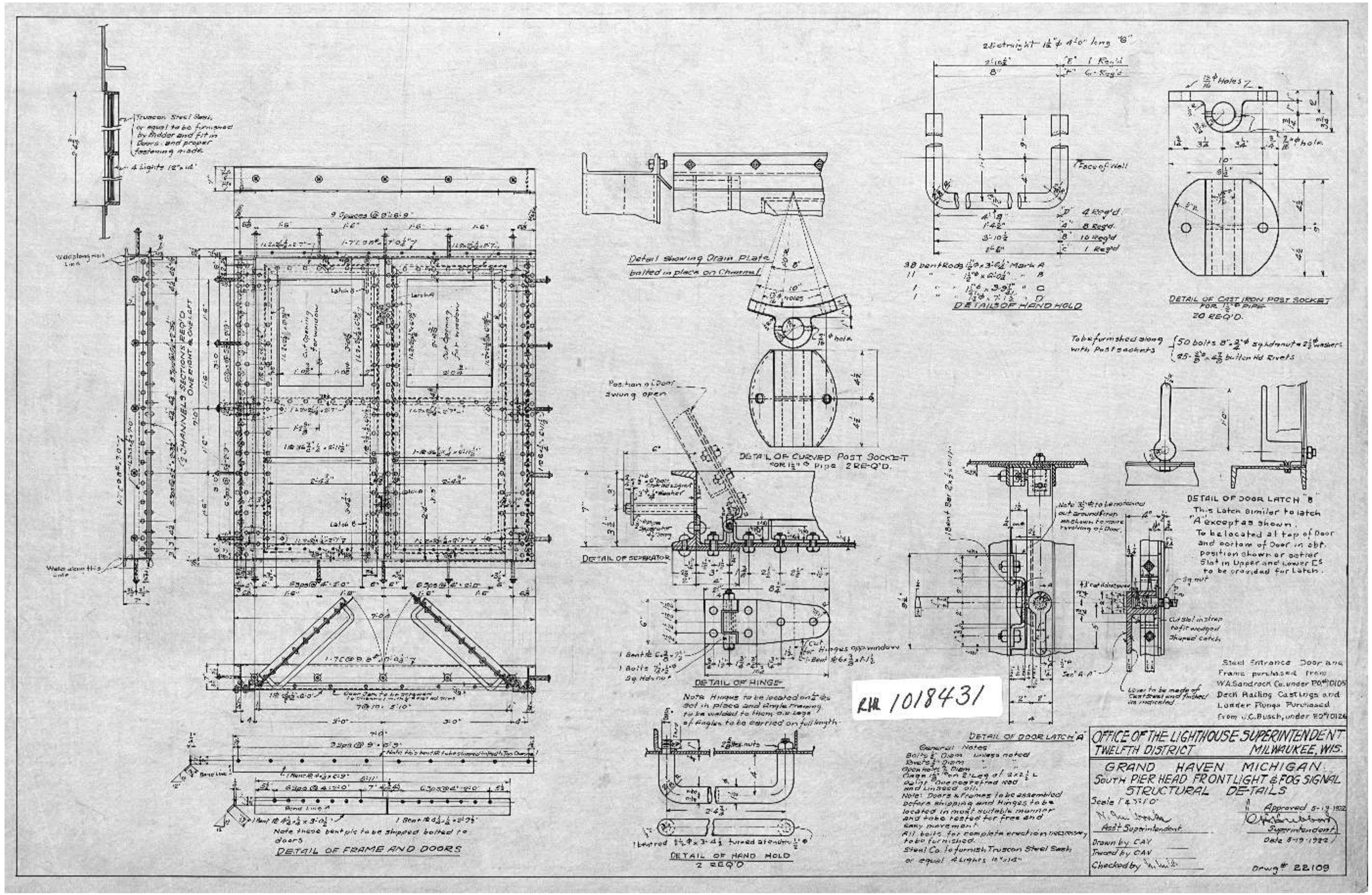

DRAWING #9 (1922)
ENTRANCE LIGHT

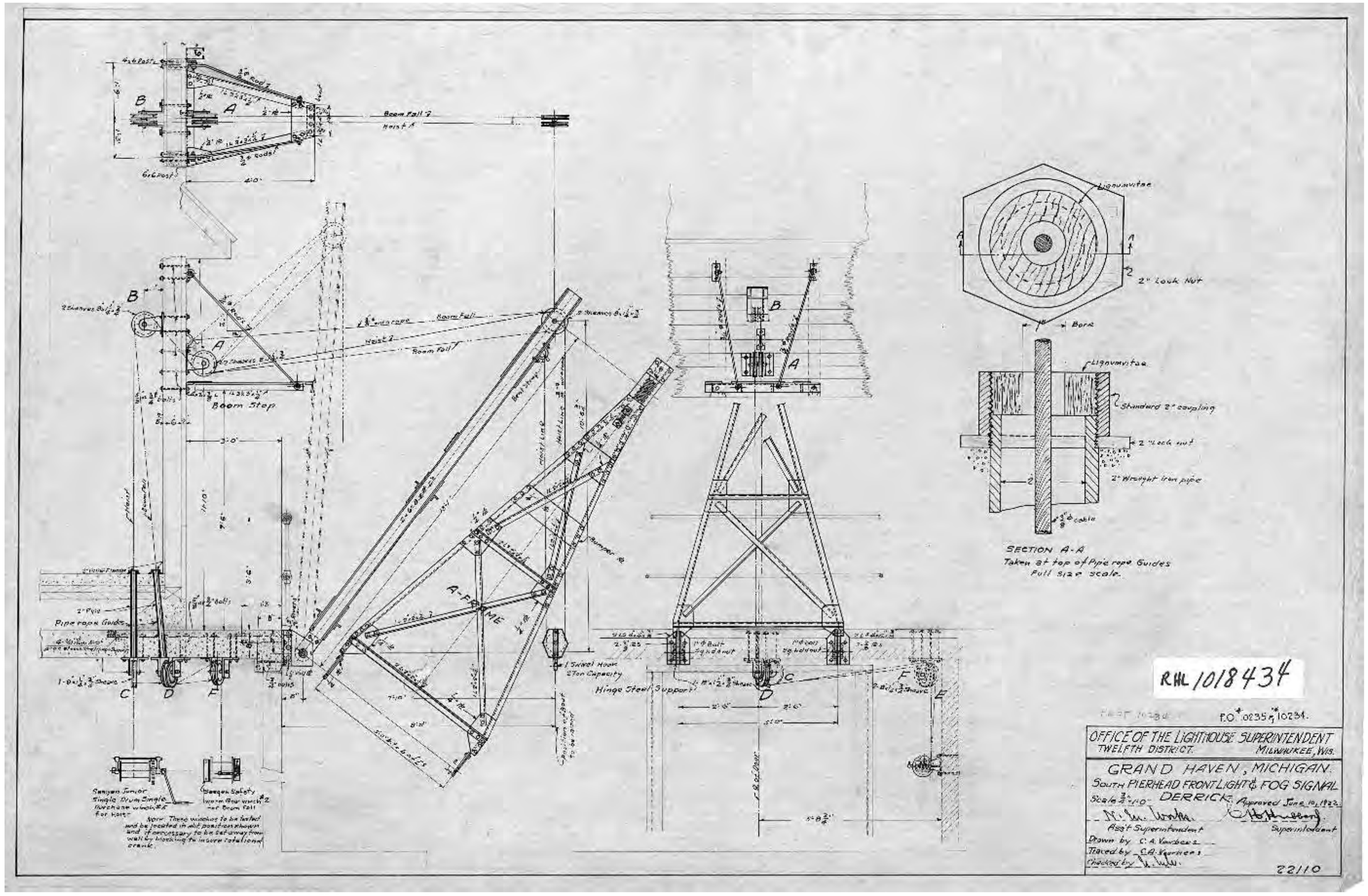

DRAWING #10 (1922)
ENTRANCE LIGHT

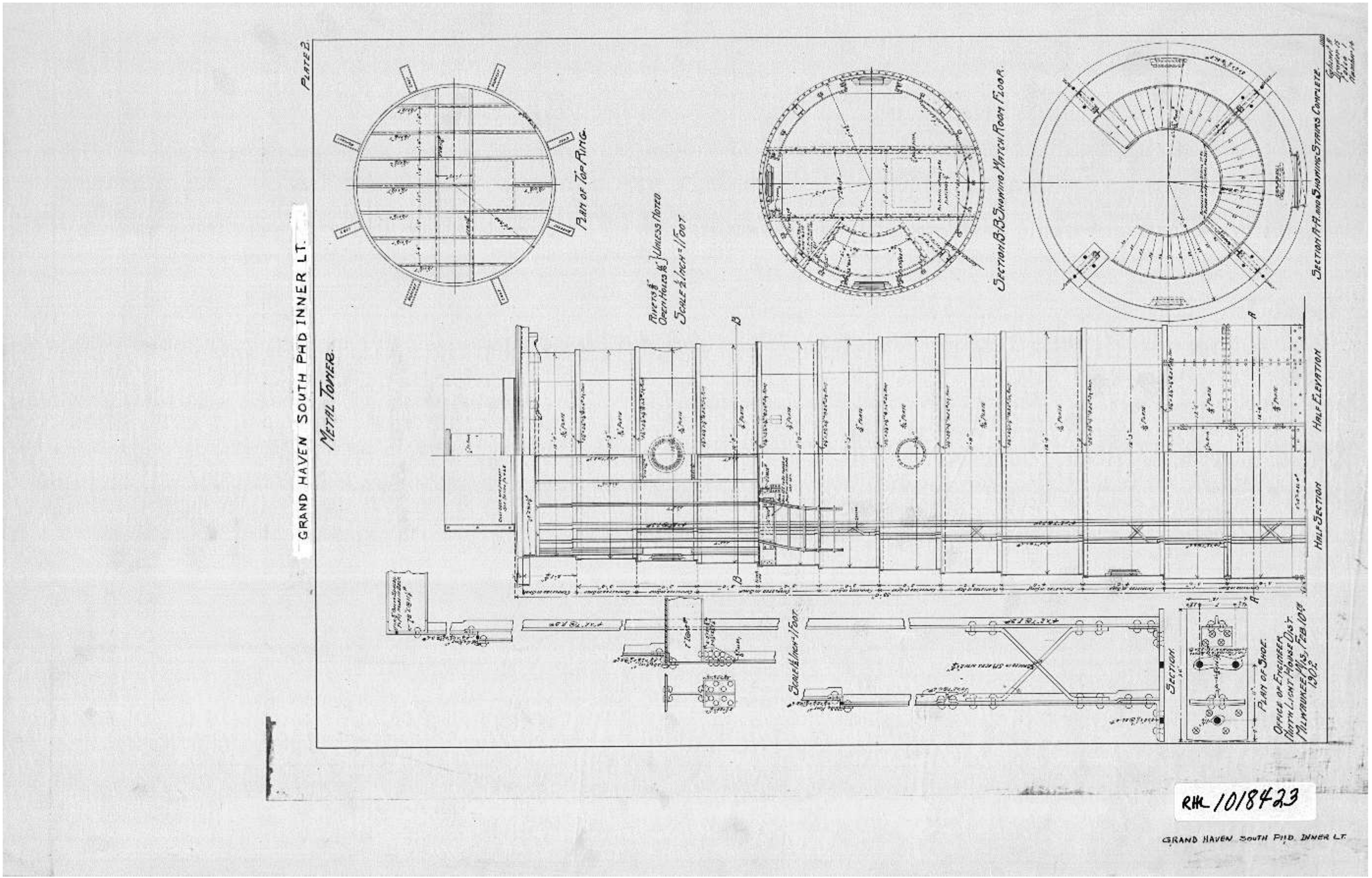

DRAWING #11 (1902)
INNER LIGHT

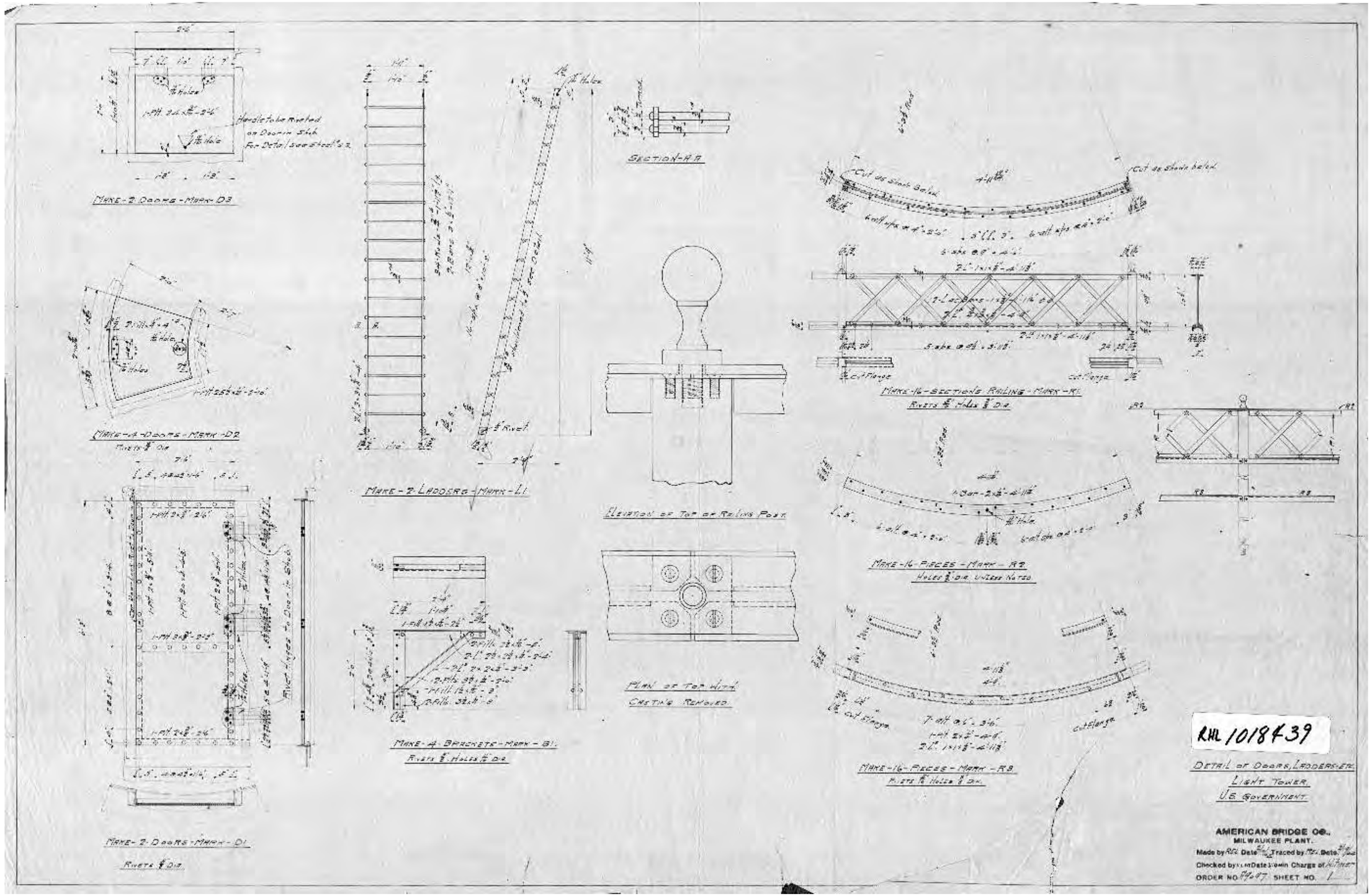

DRAWING #12 (1902)
INNER LIGHT

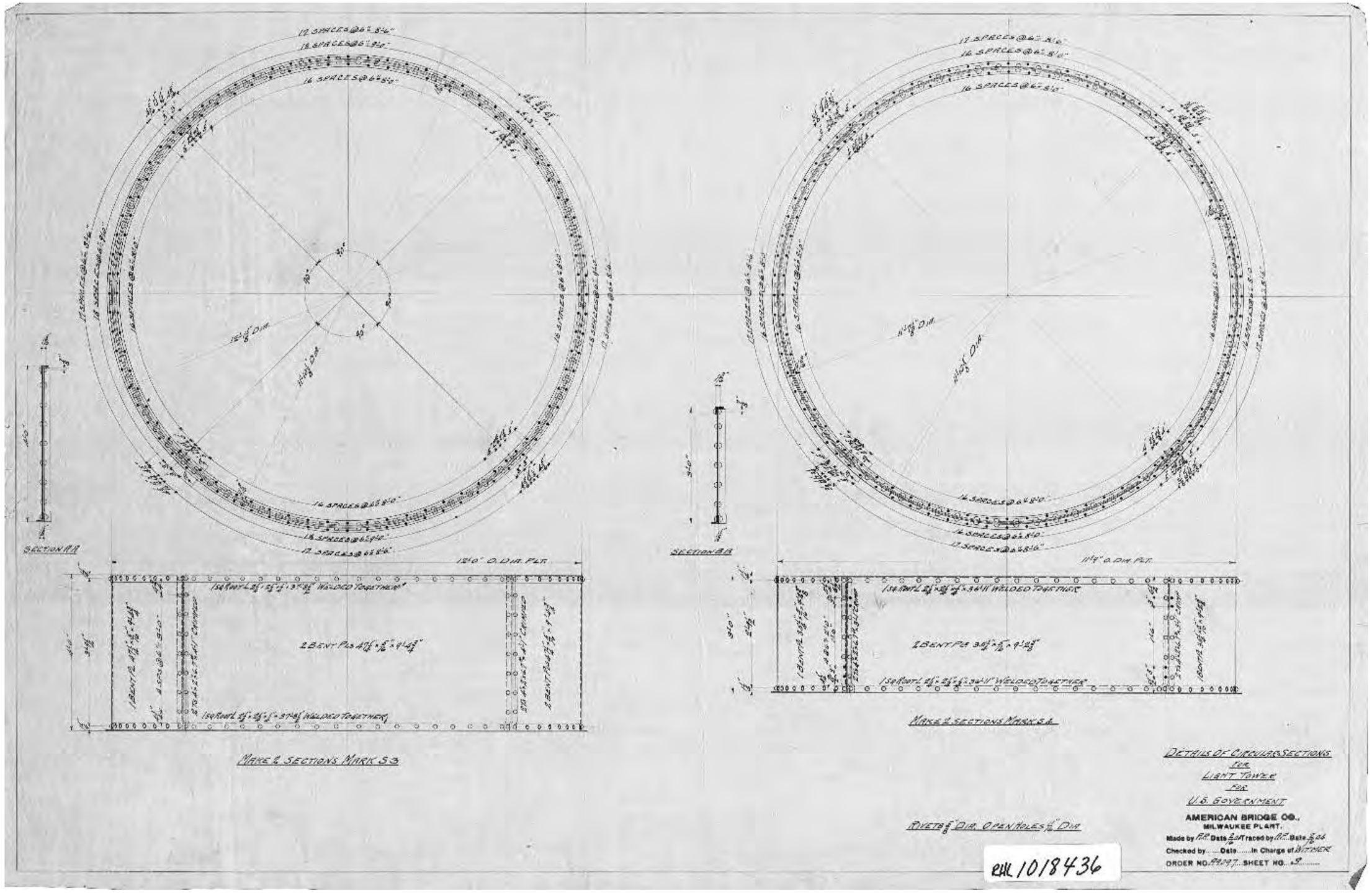

DRAWING #13 (1904)
INNER LIGHT

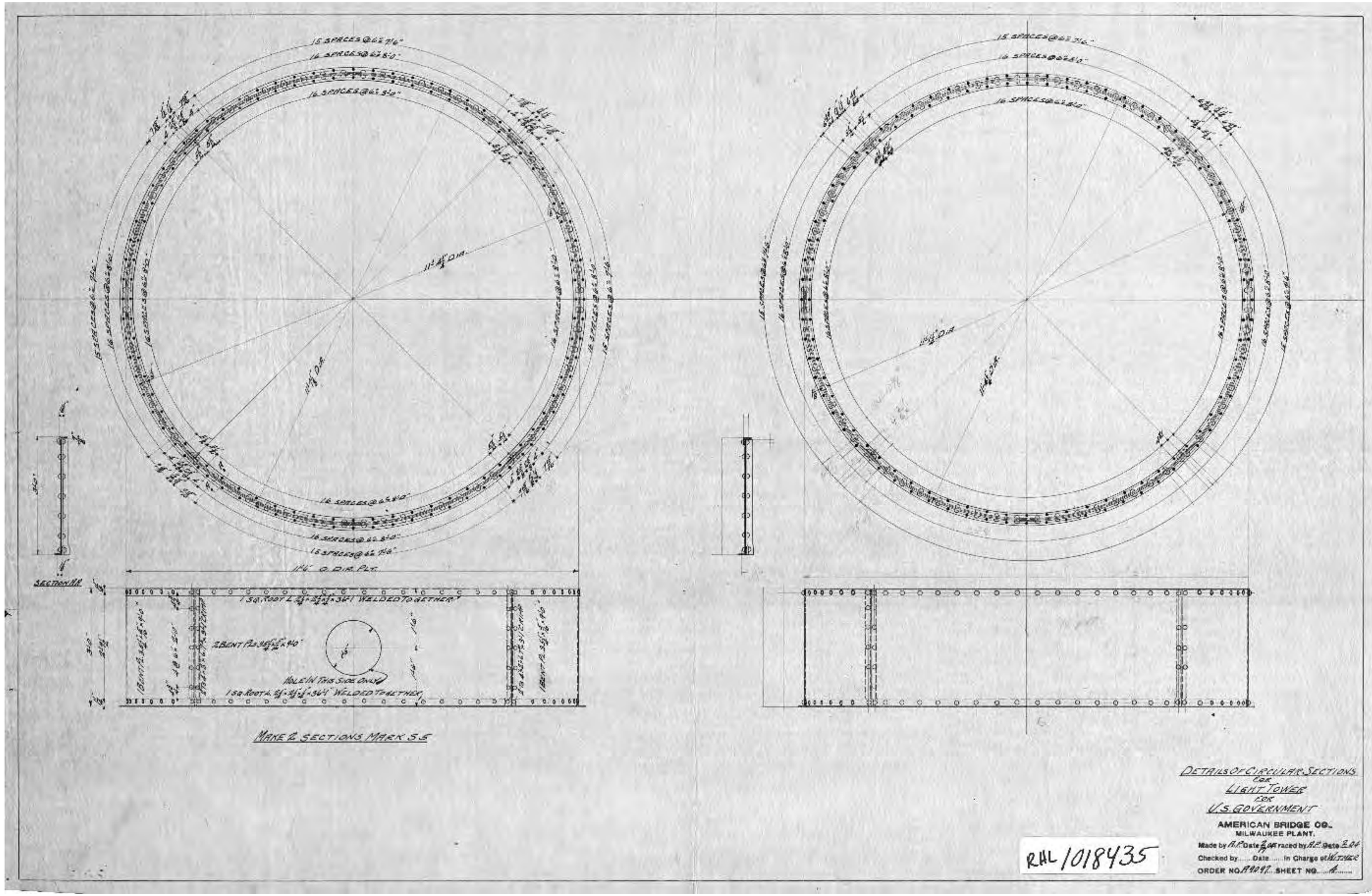

DRAWING #14 (1904)
INNER LIGHT

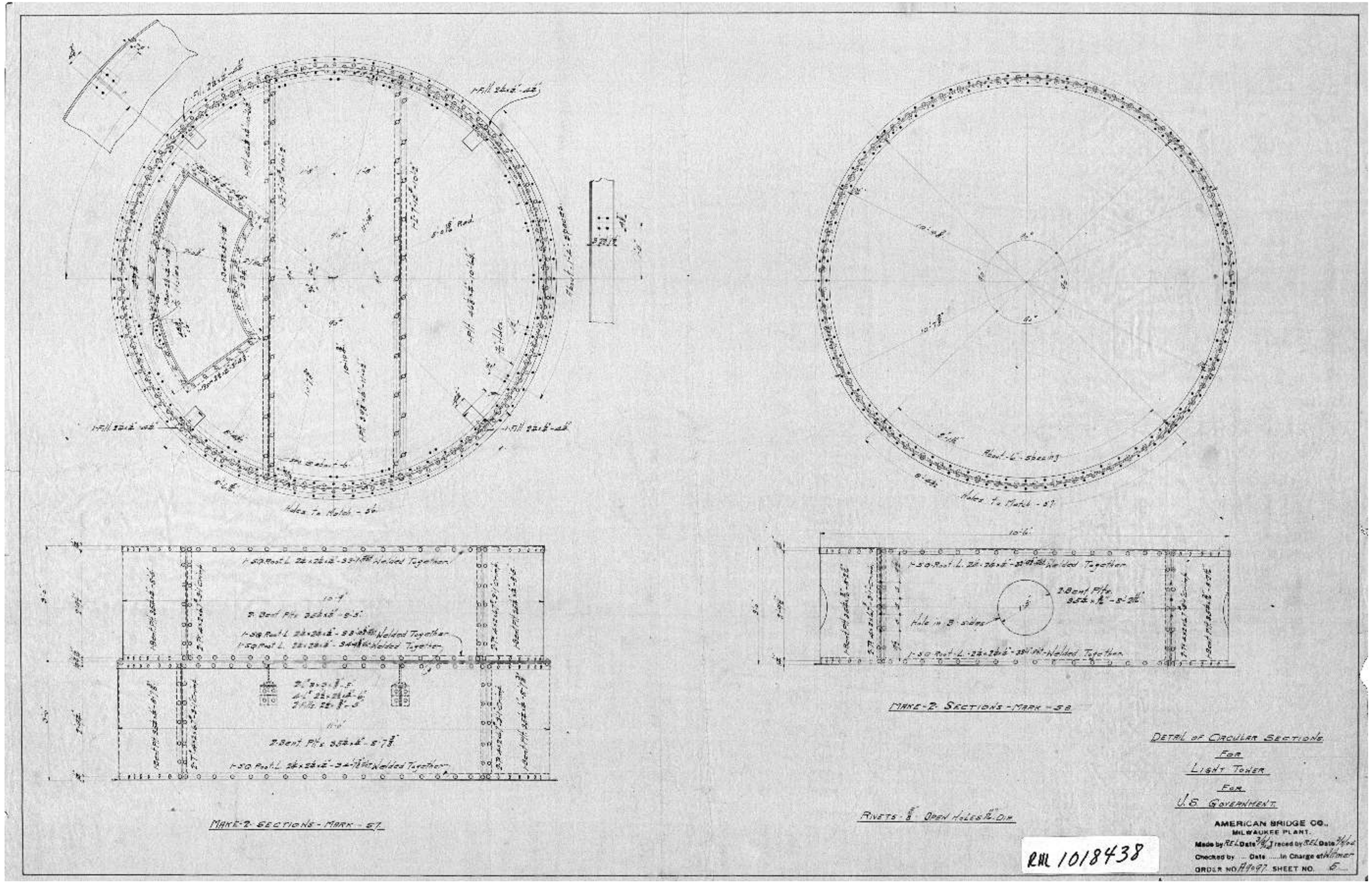

DRAWING #15 (1904)
INNER LIGHT

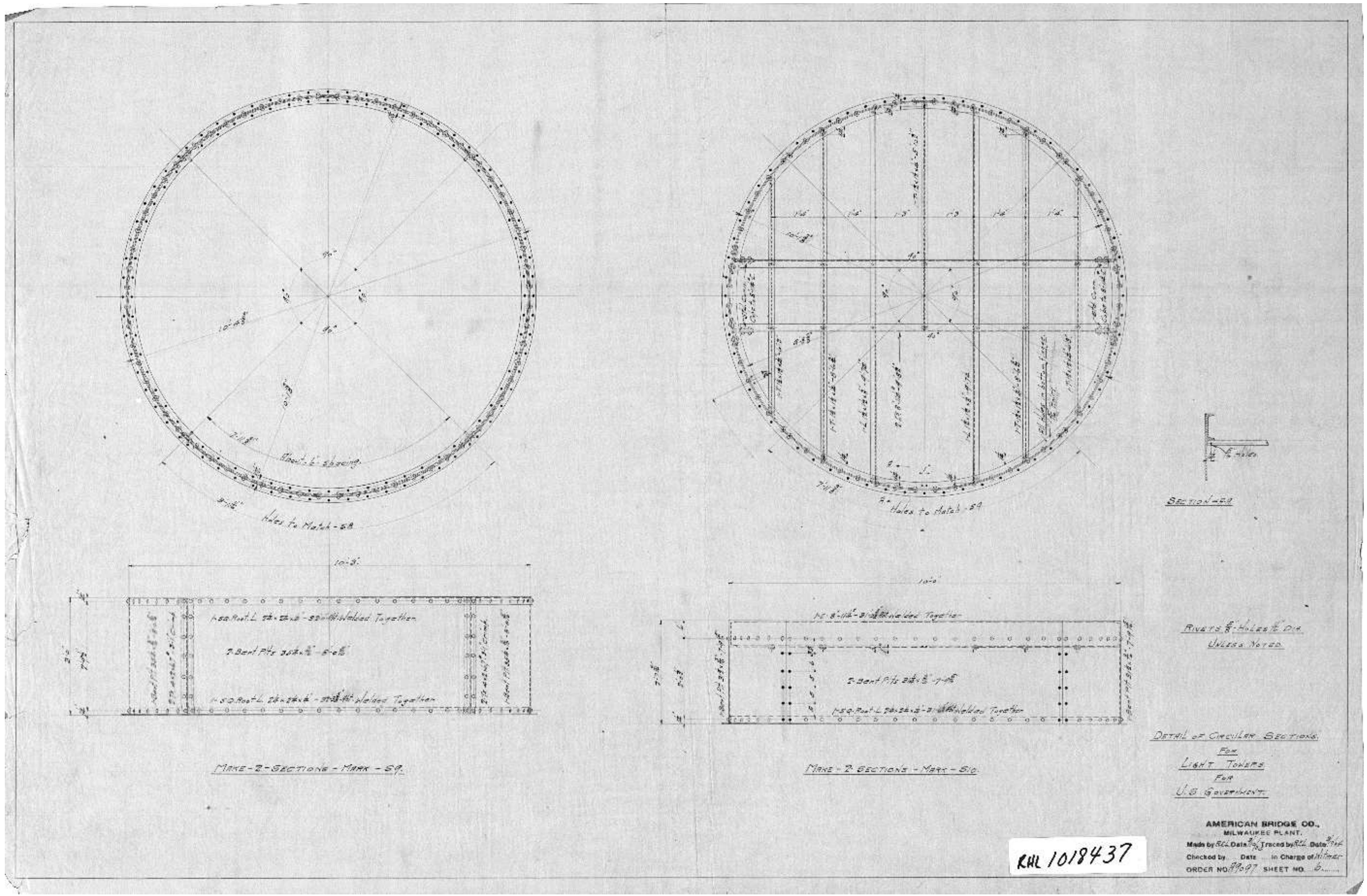

DRAWING #16 (1904)
INNER LIGHT

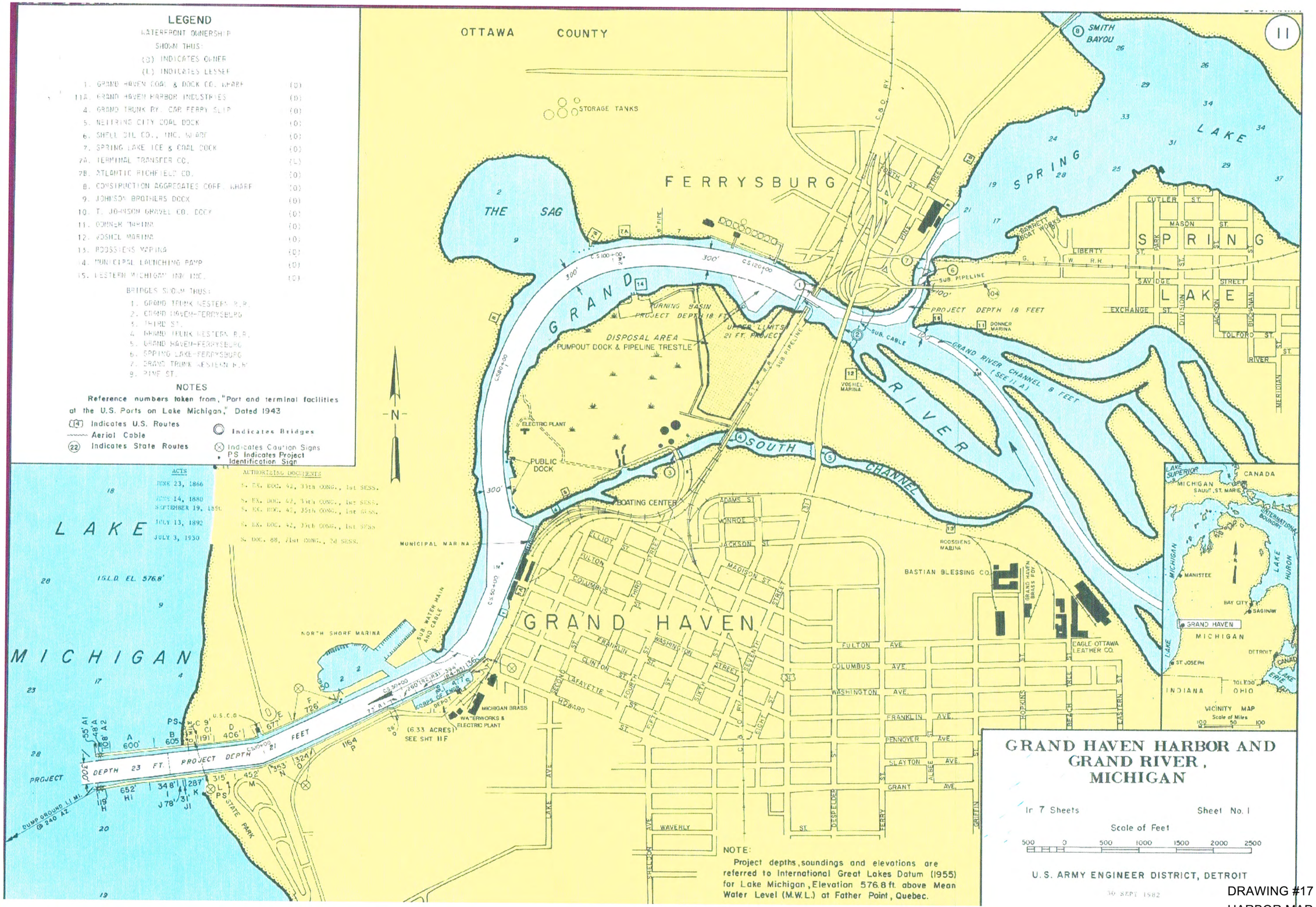

DRAWING #17 (USACOE 1982)
HARBOR MAP

IIC

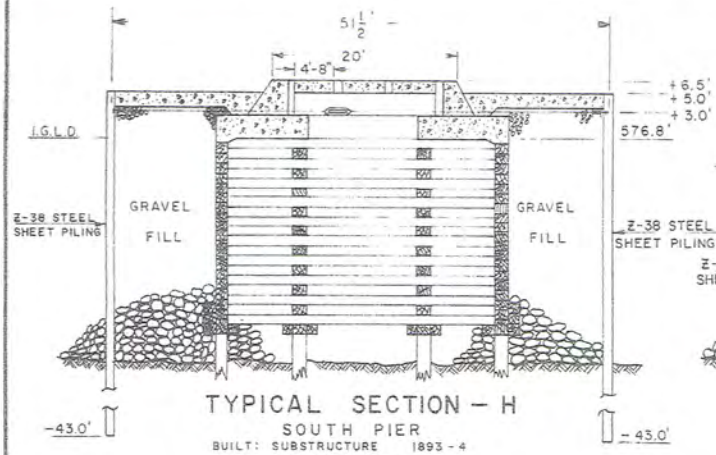

TYPICAL SECTION – H

SOUTH PIER

BUILT: SUBSTRUCTURE 1893-4
SUPERSTRUCTURE 1921-2
REPAIRED 1957

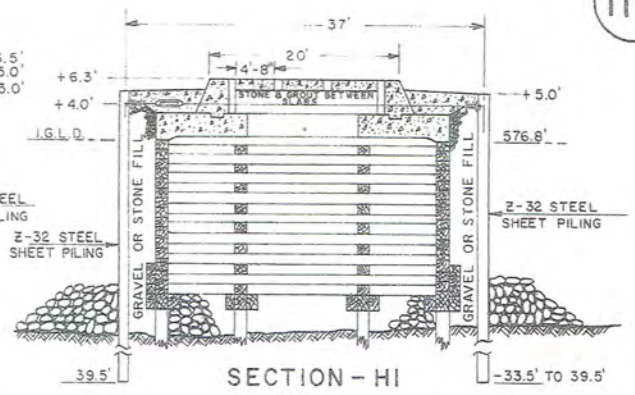

SECTION – HI

SOUTH PIER

BUILT: SUBSTRUCTURE 1883-5, 7, 91-3
SUPERSTRUCTURE 1921-2
REPAIRED 1954

NOTE: SUBSTRUCTURE SAME AS IN SECTION I FROM STA. 3+49.81 W. TO 8+10.29 W.

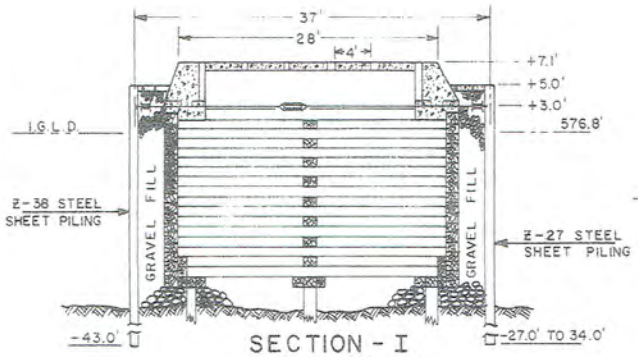

SECTION – I

SOUTH PIER

BUILT: SUBSTRUCTURE 1882-4
SUPERSTRUCTURE 1919-20
REPAIRED 1951, 52, 57

NOTE: Z-32 S.S. PILING USED BTW. STATION 2+01 AND 2+53.

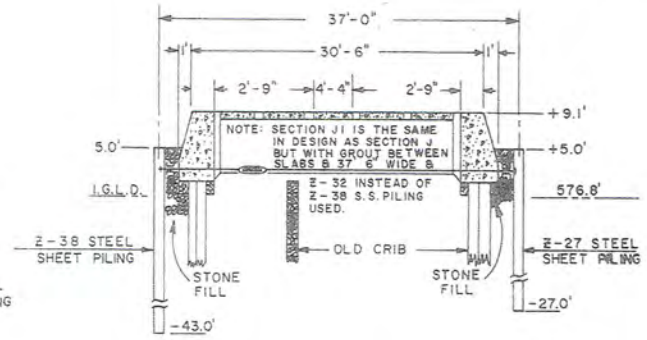

SECTION – J,JI

SOUTH PIER

BUILT: SUBSTRUCTURE 1868-9, 1919-20
SUPERSTRUCTURE 1919-20
REPAIRED 1957, 59-60

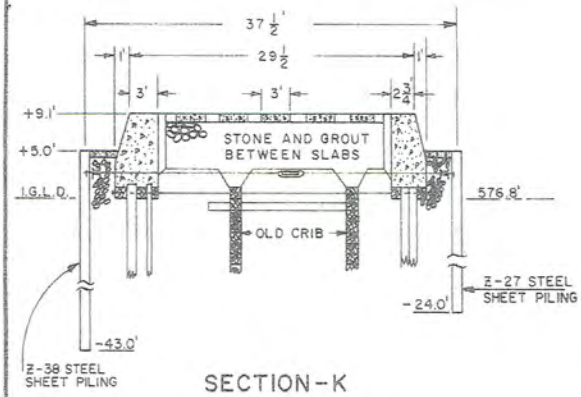

SECTION – K

SOUTH PIER

BUILT: SUBSTRUCTURE 1867-8, 1916-7
SUPERSTRUCTURE 1916-7
REPAIRED 1959-60

GRAND HAVEN HARBOR AND GRAND RIVER MICHIGAN

OTTAWA COUNTY

In 7 Sheets

Sheet No. 4

Scale of Feet

10 0 10 20 30 40

U. S. ARMY ENGINEER DISTRICT, DETROIT

30 SEPTEMBER 1985

APPENDIX C

DRAWINGS OF EXISTING CONDITIONS

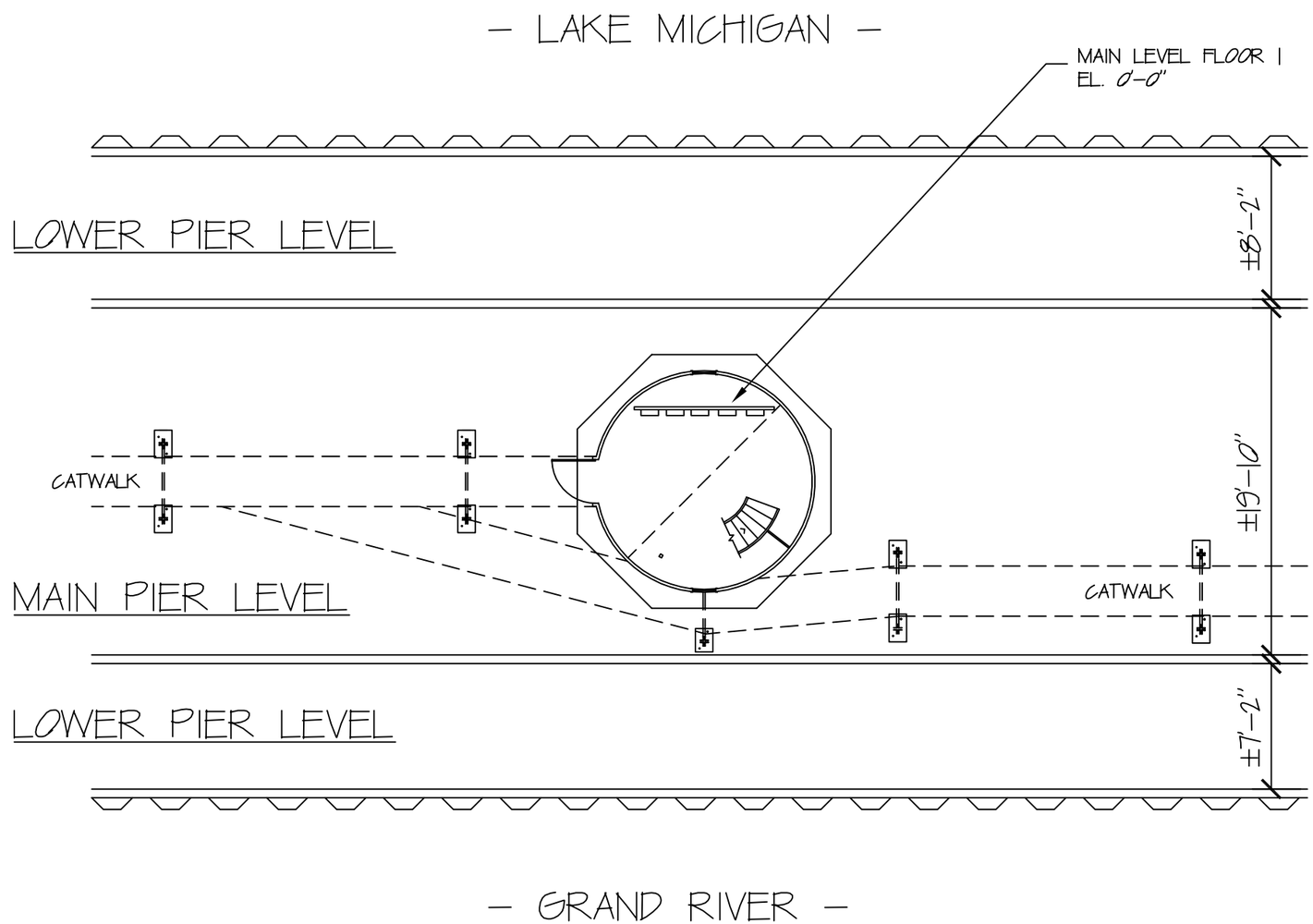

N

INNER LIGHT PIER PLAN

SCALE: 1/8" = 1'-0"

SANDERS & CZAPSKI ASSOCIATES, PLLC
architecture / landscape architecture / historic preservation
109 South Front Street / Suite 210 / Marquette, Michigan
Phone: 906.273.1207 / Fax: 906.273.1208
Www.Sanders-Czapski.com

HISTORIC STRUCTURES REPORT
GRAND HAVEN SOUTH PIER
ENTRANCE AND INNER LIGHTS
GRAND HAVEN, MICHIGAN

ISSUE:	DATE:
HSR	JULY 2013

DRAWN BY: G. DEMPSEY
APPROVED: K. CZAPSKI

INNER LIGHT PIER DECK PLAN

A1

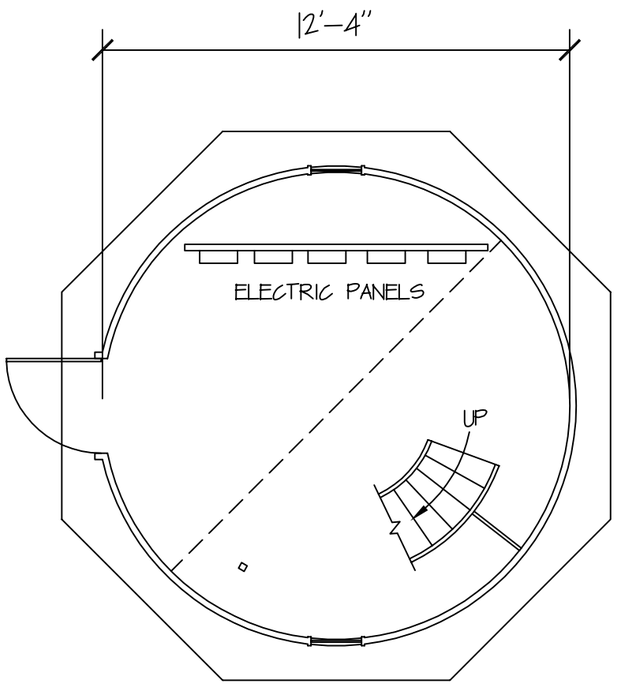

N

LEVEL 1

SCALE: 1/4" = 1'-0"

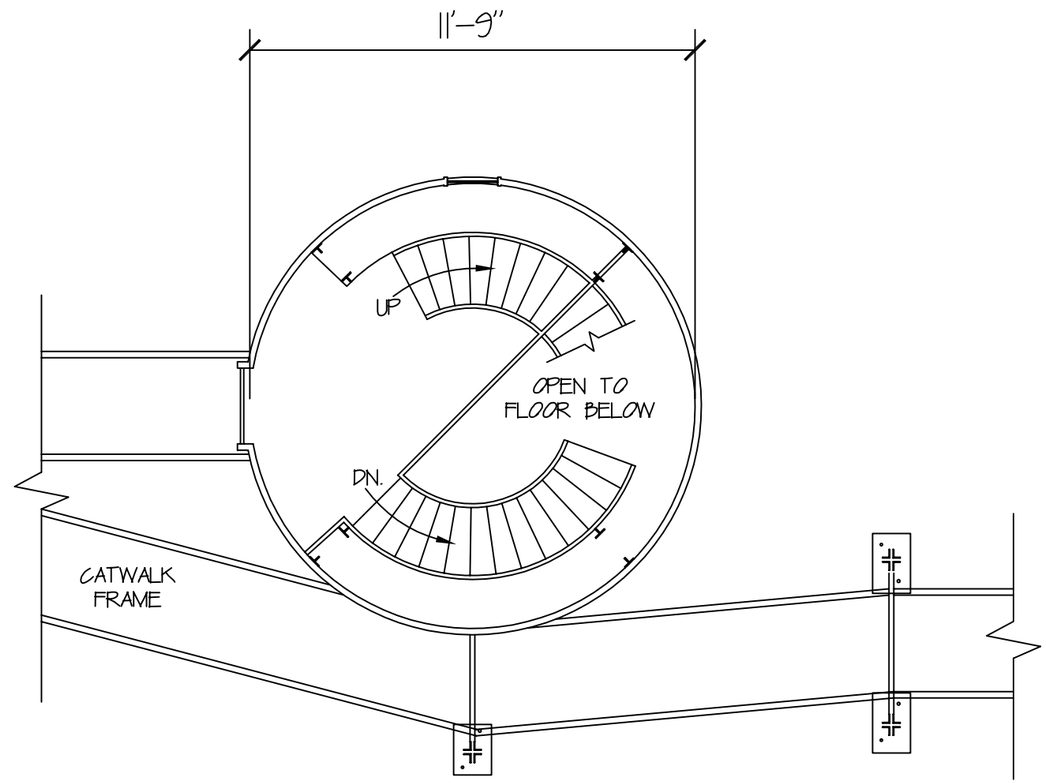

LEVEL 2

SCALE: 1/4" = 1'-0"

SANDERS & CZAPSKI ASSOCIATES, PLLC
architecture / landscape architecture / historic preservation
109 South Front Street / Suite 210 / Marquette, Michigan
Phone: 906.273.1207 / Fax: 906.273.1208
Www.Sanders-Czapski.com

HISTORIC STRUCTURES REPORT
GRAND HAVEN SOUTH PIER
ENTRANCE AND INNER LIGHTS
GRAND HAVEN, MICHIGAN

ISSUE:	DATE:
HSR	JULY 2013

DRAWN BY: G. DEMPSEY
APPROVED: K. CZAPSKI

INNER LIGHT
FLOOR PLANS

A2

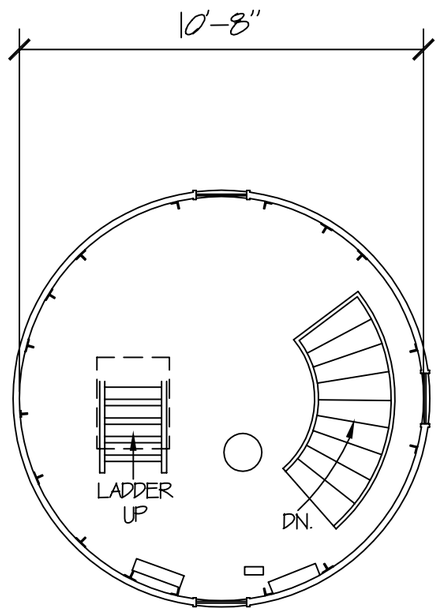

N

LEVEL 3

SCALE: 1/4" = 1'-0"

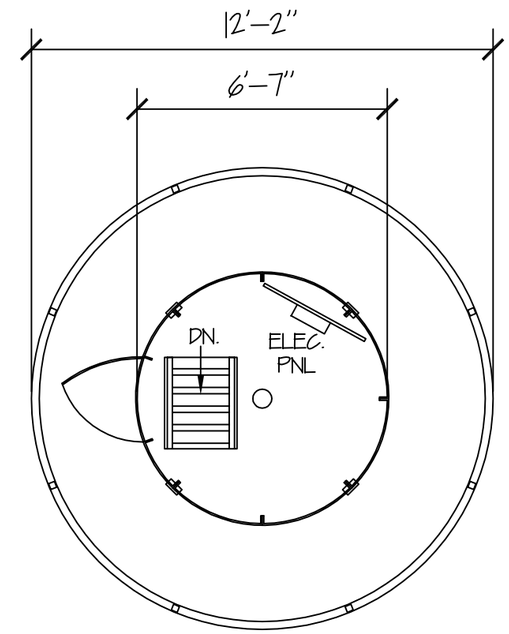

LANTERN DECK - LEVEL 4

SCALE: 1/4" = 1'-0"

SANDERS & CZAPSKI ASSOCIATES, PLLC
architecture / landscape architecture / historic preservation
109 South Front Street / Suite 210 / Marquette, Michigan
Phone: 906.273.1207 / Fax: 906.273.1208
Www.Sanders-Czapski.com

HISTORIC STRUCTURES REPORT
GRAND HAVEN SOUTH PIER
ENTRANCE AND INNER LIGHTS
GRAND HAVEN, MICHIGAN

ISSUE:	DATE:
HSR	JULY 2013

DRAWN BY: G. DEMPSEY
APPROVED: K. CZAPSKI

INNER LIGHT
FLOOR PLANS

A3

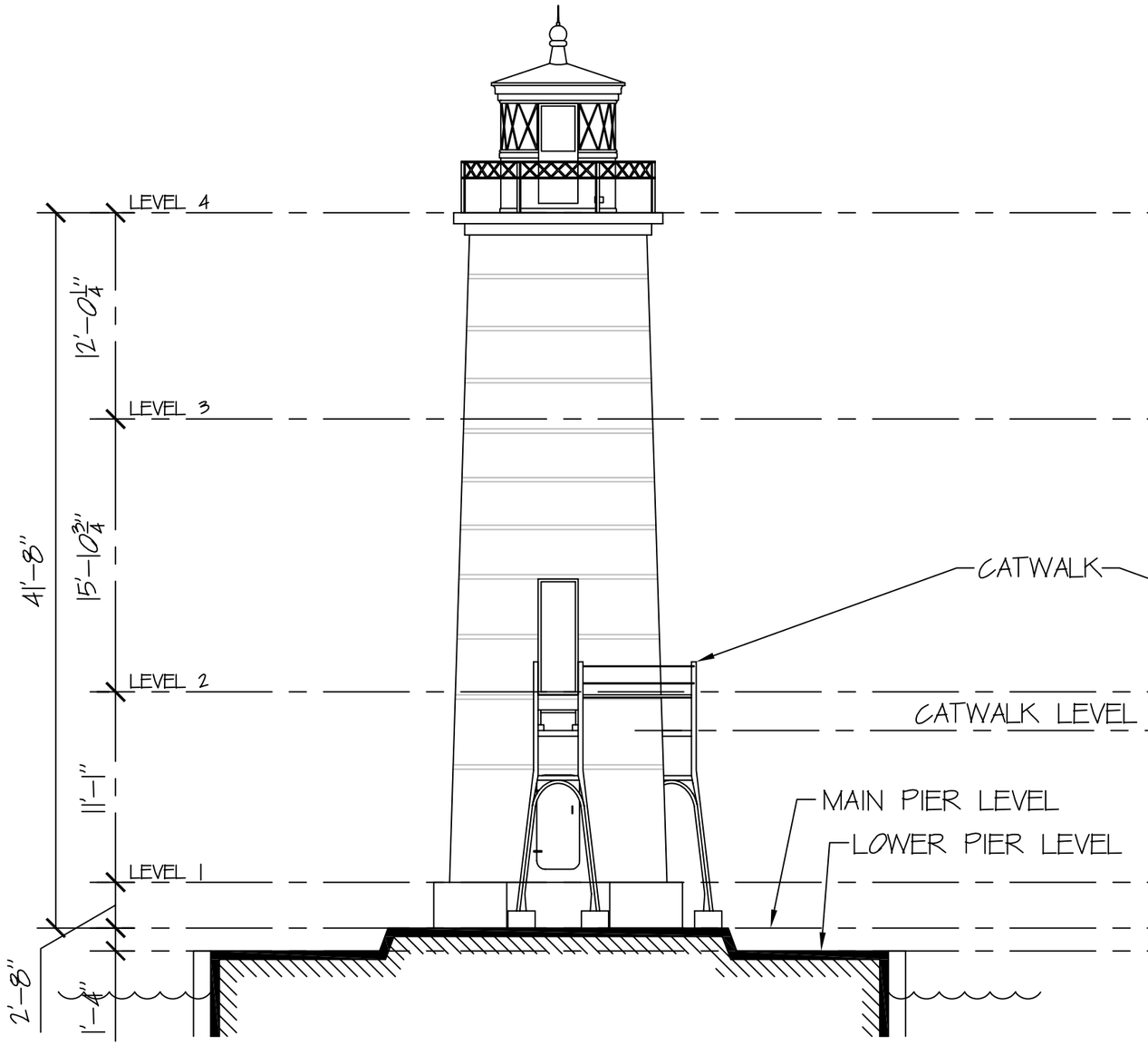

EAST ELEVATION

SCALE: 1/8" = 1'-0"

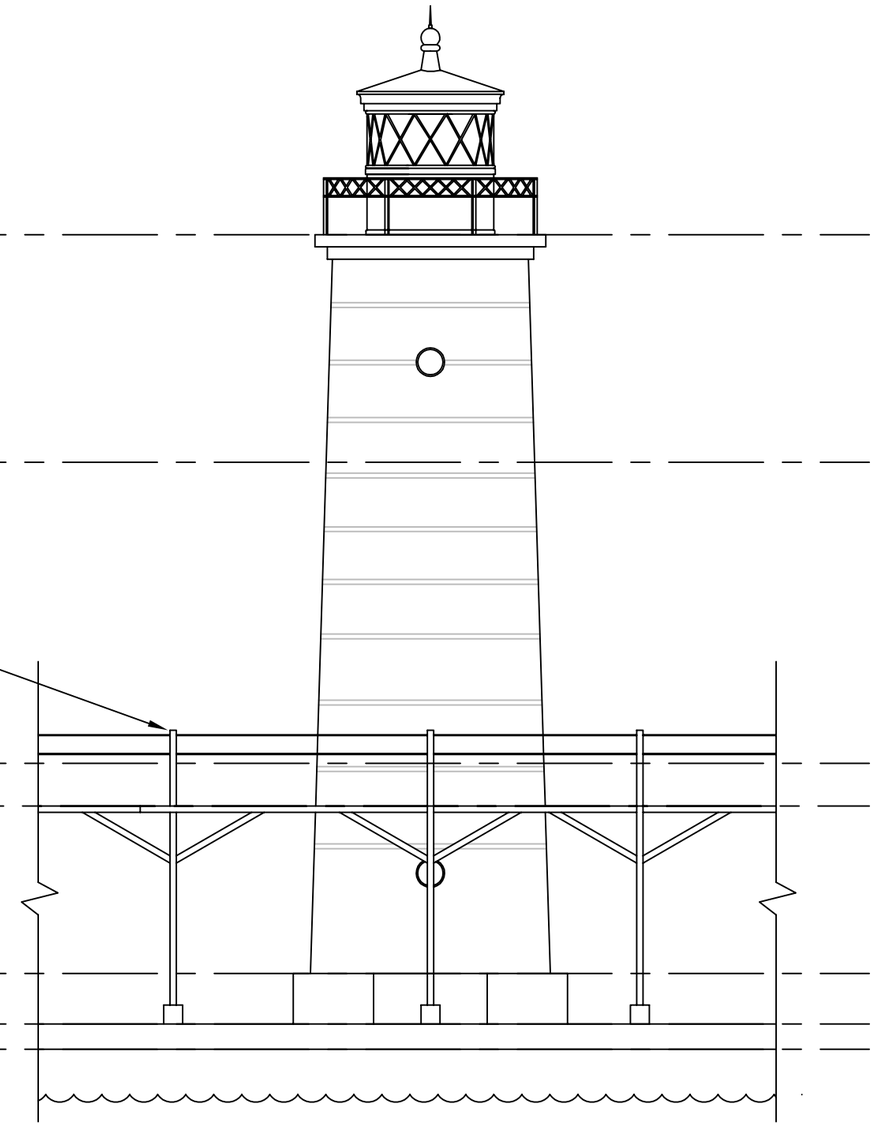

NORTH ELEVATION

SCALE: 1/8" = 1'-0"

SANDERS & CZAPSKI ASSOCIATES, PLLC
architecture / landscape architecture / historic preservation
109 South Front Street / Suite 210 / Marquette, Michigan
Phone: 906.273.1207 / Fax: 906.273.1208
Www.Sanders-Czapski.com

HISTORIC STRUCTURES REPORT
GRAND HAVEN SOUTH PIER
ENTRANCE AND INNER LIGHTS
GRAND HAVEN, MICHIGAN

ISSUE:	DATE:
HSR	JULY 2013

DRAWN BY: G. DEMPSEY
APPROVED: K. CZAPSKI

INNER LIGHT ELEVATIONS

A4

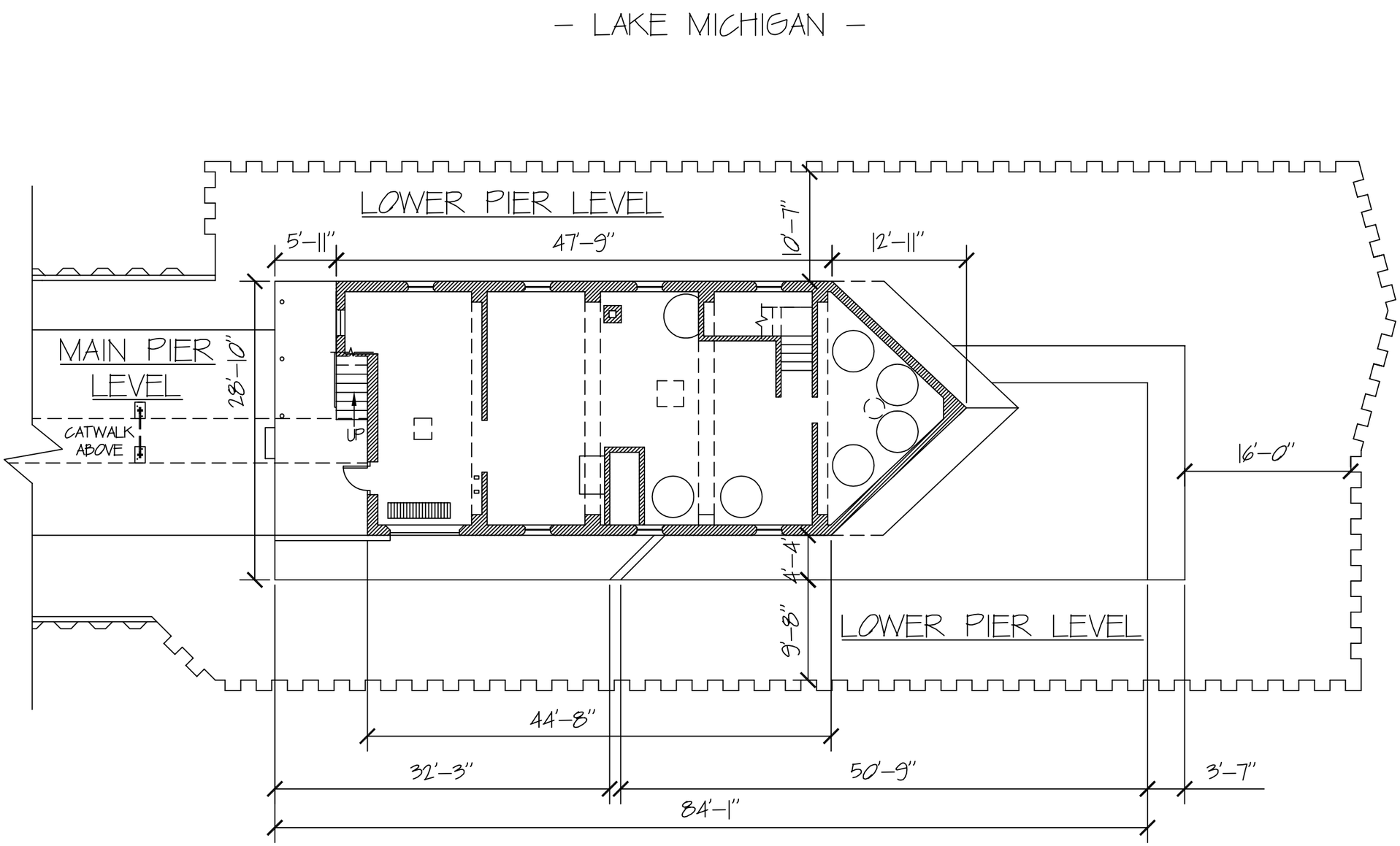

PIER DECK LEVEL PLAN

SCALE: 3/32" = 1'–0"

SANDERS & CZAPSKI ASSOCIATES, PLLC
architecture / landscape architecture / historic preservation
109 South Front Street / Suite 210 / Marquette, Michigan
Phone: 906.273.1207 / Fax: 906.273.1208
Www.Sanders-Czapski.com

HISTORIC STRUCTURES REPORT
GRAND HAVEN SOUTH PIER
ENTRANCE AND INNER LIGHTS
GRAND HAVEN, MICHIGAN

HSR	JULY 2013
ISSUE:	DATE:

DRAWN BY: G. DEMPSEY
APPROVED: K. CZAPSKI

ENTRANCE LIGHT PIER DECK PLAN

A5

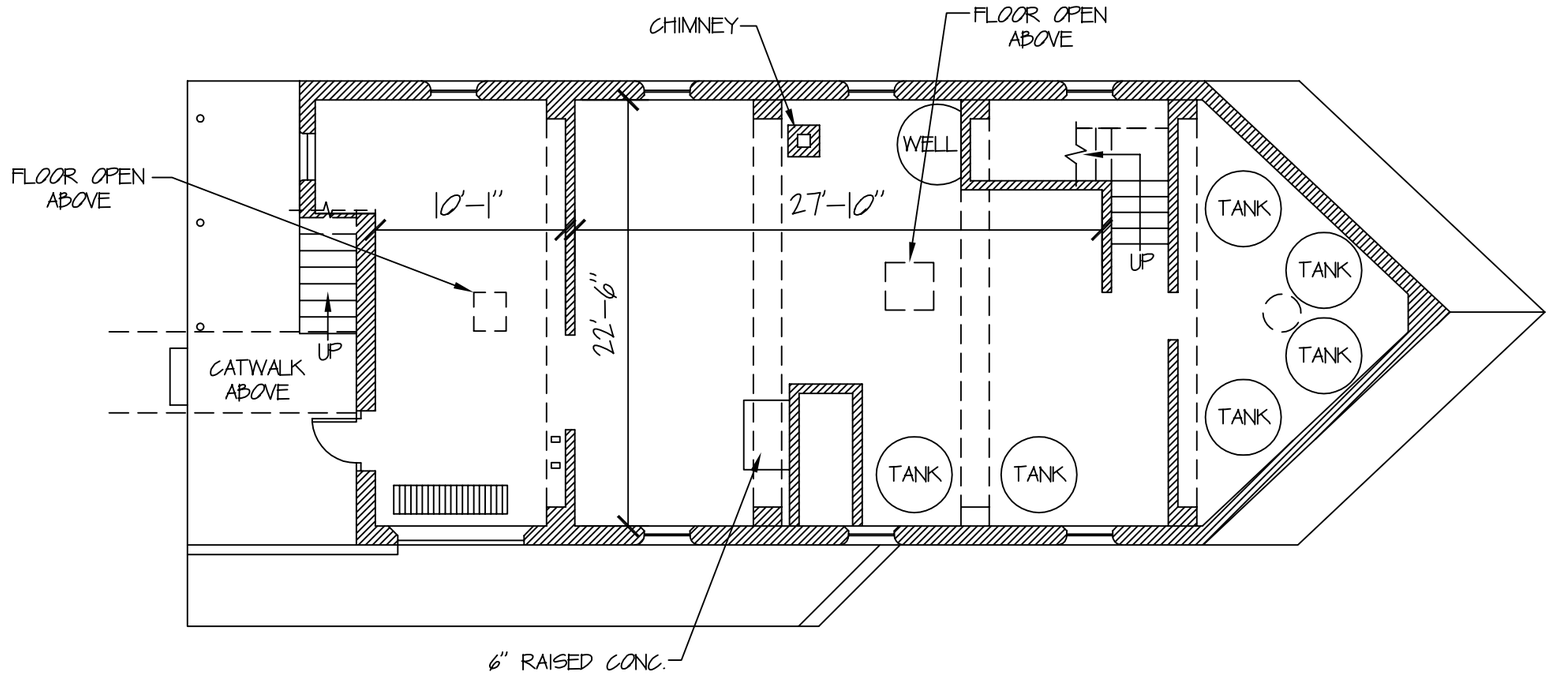

PIER DECK FLOOR PLAN

SCALE: 1/8" = 1'-0"

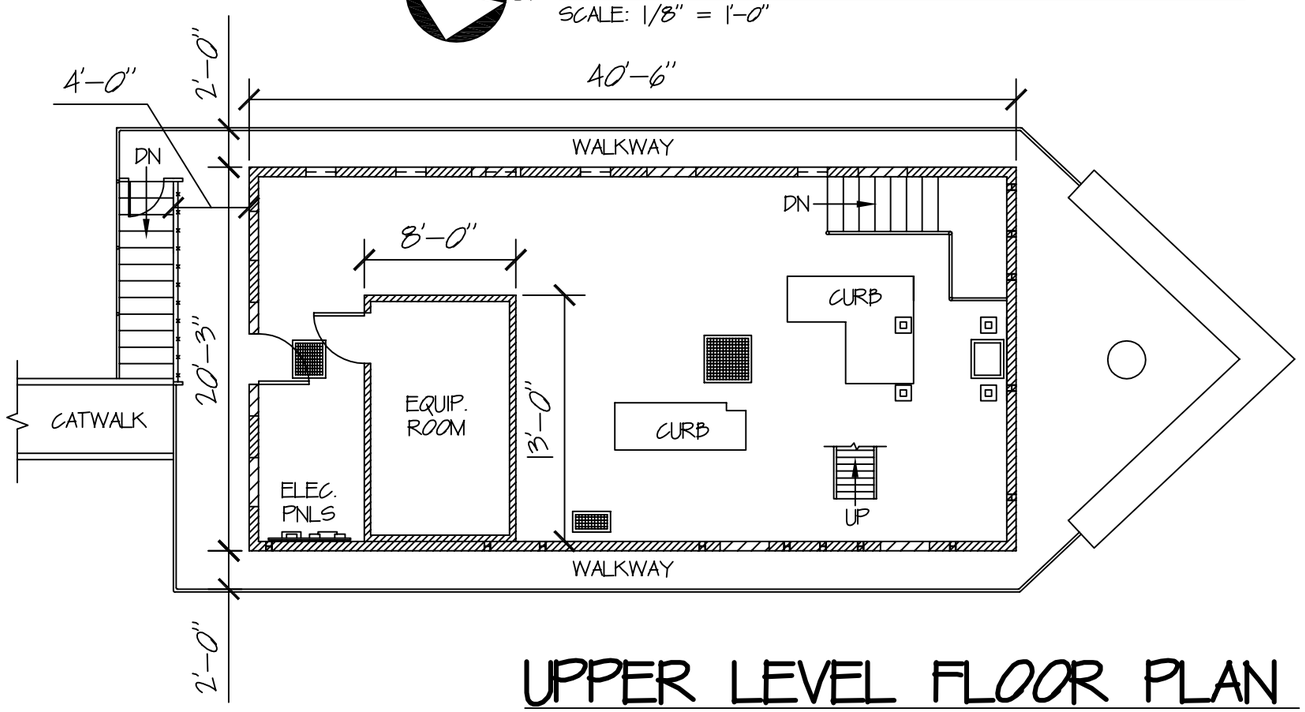

UPPER LEVEL FLOOR PLAN

SCALE: 1/8" = 1'-0"

SANDERS & CZAPSKI ASSOCIATES, PLLC
architecture / landscape architecture / historic preservation
109 South Front Street / Suite 210 / Marquette, Michigan
Phone: 906.273.1207 / Fax: 906.273.1208
Www.Sanders-Czapski.com

HISTORIC STRUCTURES REPORT
GRAND HAVEN SOUTH PIER
ENTRANCE AND INNER LIGHTS
GRAND HAVEN, MICHIGAN

ISSUE:	DATE:
HSR	JULY 2013

DRAWN BY: G. DEMPSEY
APPROVED: K. CZAPSKI

ENTRANCE LIGHT FLOOR PLANS

A6

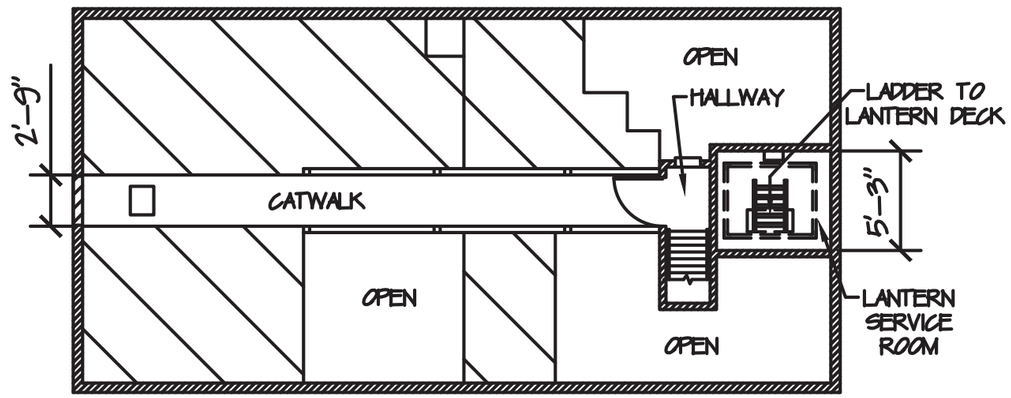

N

CATWALK LEVEL FLOOR PLAN

SCALE: 1/8" = 1'-0"

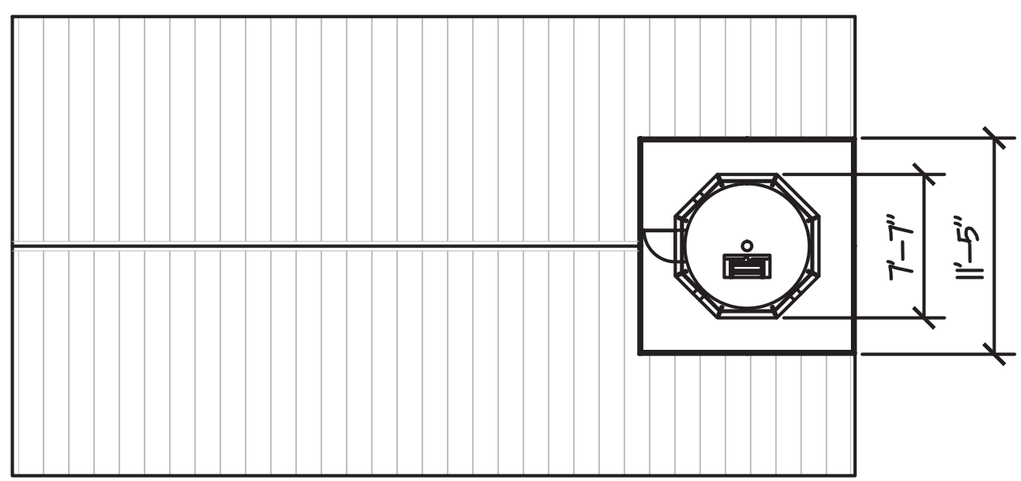

LANTERN AND LANTERN DECK PLAN

SCALE: 1/8" = 1'-0"

SANDERS & CZAPSKI ASSOCIATES, PLLC
architecture / landscape architecture / historic preservation
109 South Front Street / Suite 210 / Marquette, Michigan
Phone: 906.273.1207 / Fax: 906.273.1208
Www.Sanders-Czapski.com

HISTORIC STRUCTURES REPORT
GRAND HAVEN SOUTH PIER
ENTRANCE AND INNER LIGHTS
GRAND HAVEN, MICHIGAN

HSR ISSUE:	JULY 2013 DATE:

DRAWN BY: G. DEMPSEY
APPROVED: K. CZAPSKI

ENTRANCE LIGHT FLOOR PLANS

A7

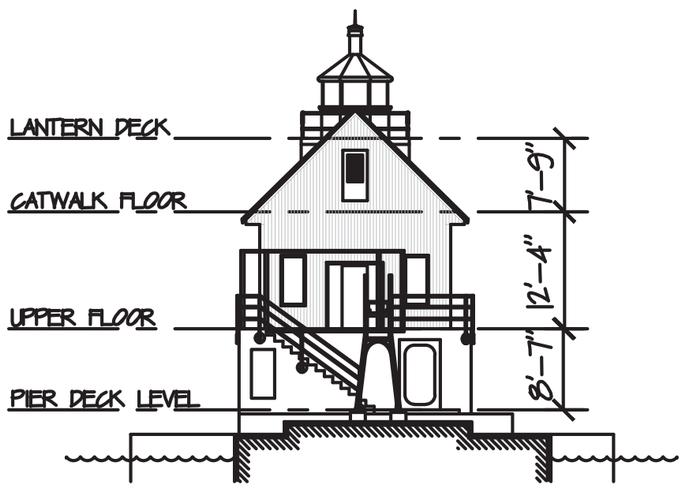

EAST ELEVATION

SCALE: 1/16" = 1'-0"

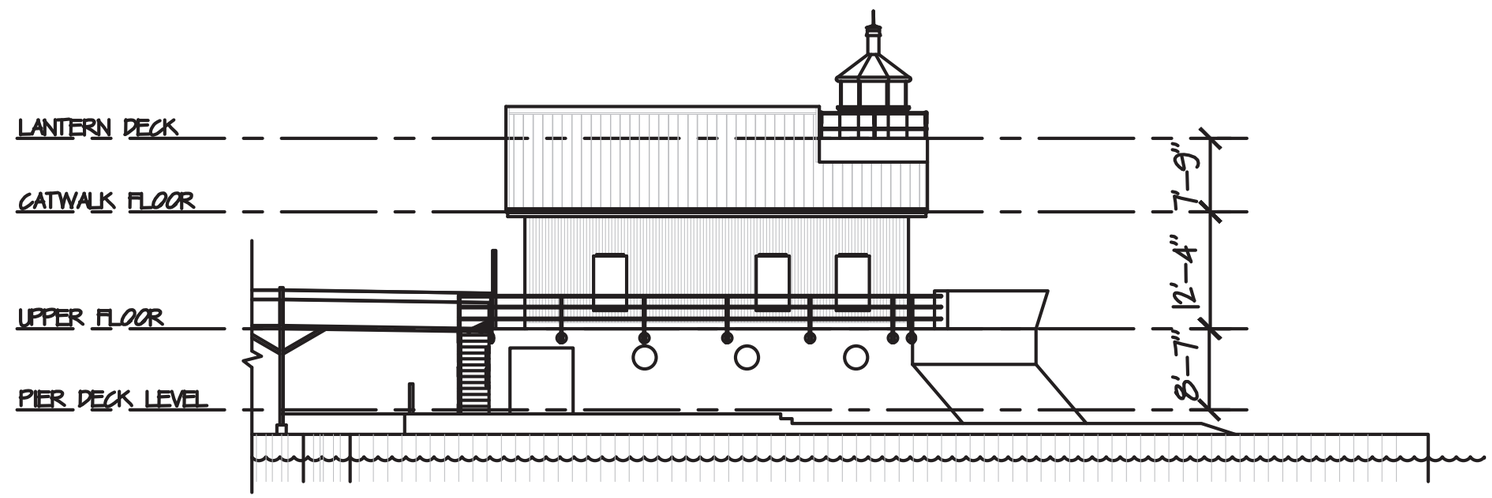

NORTH ELEVATION

SCALE: 1/16" = 1'-0"

SANDERS & CZAPSKI ASSOCIATES, PLLC
architecture / landscape architecture / historic preservation
109 South Front Street / Suite 210 / Marquette, Michigan
Phone: 906.273.1207 / Fax: 906.273.1208
Www.Sanders-Czapski.com

HISTORIC STRUCTURES REPORT
GRAND HAVEN SOUTH PIER
ENTRANCE AND INNER LIGHTS
GRAND HAVEN, MICHIGAN

ISSUE:	DATE:
HSR	JULY 2013

DRAWN BY: G. DEMPSEY
APPROVED: K. CZAPSKI

ENTRANCE LIGHT NORTH AND EAST ELEVATIONS

A8

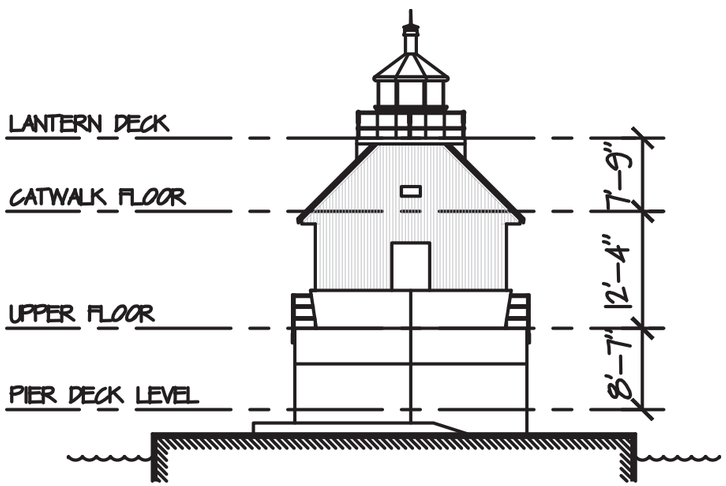

WEST ELEVATION

SCALE: 1/16" = 1'-0"

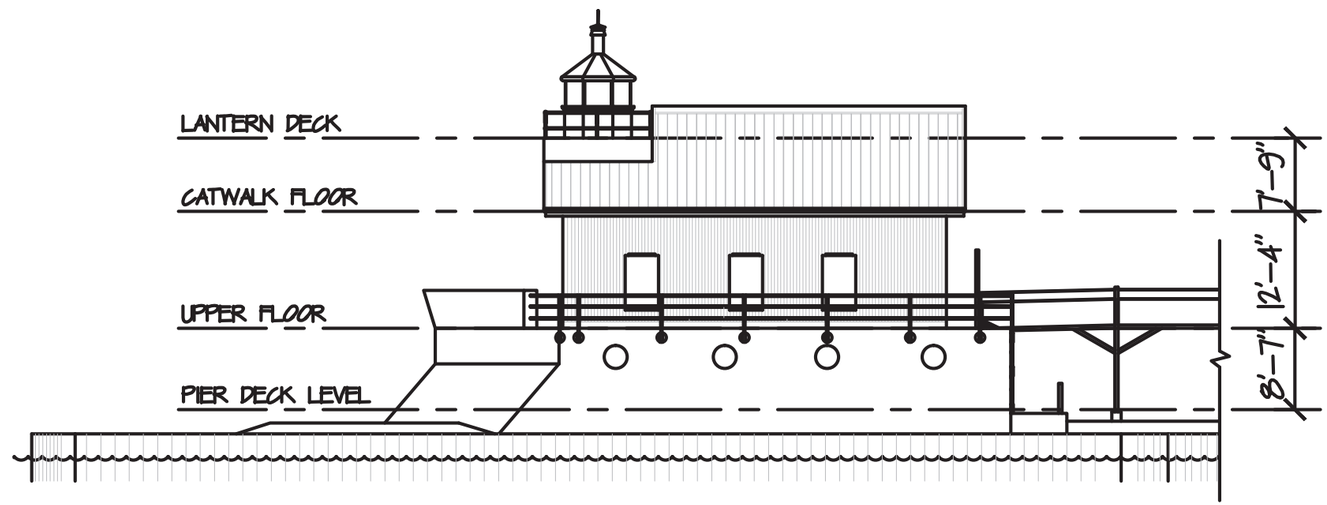

SOUTH ELEVATION

SCALE: 1/16" = 1'-0"

SANDERS & CZAPSKI ASSOCIATES, PLLC
architecture / landscape architecture / historic preservation
109 South Front Street / Suite 210 / Marquette, Michigan
Phone: 906.273.1207 / Fax: 906.273.1208
Www.Sanders-Czapski.com

HISTORIC STRUCTURES REPORT
GRAND HAVEN SOUTH PIER
ENTRANCE AND INNER LIGHTS
GRAND HAVEN, MICHIGAN

ISSUE:	DATE:
HSR	JULY 2013

DRAWN BY: G. DEMPSEY
APPROVED: K. CZAPSKI

ENTRANCE LIGHT SOUTH AND WEST ELEVATIONS

A9

APPENDIX D

HISTORIC PAINT COLOR REPORT

PAINT SAMPLES

The Grand Haven Entrance and Inner Lights were scheduled to be painted in the summer of 2013. The painting work was to include the removal of existing paint from most surfaces. In order to maintain records of previous paint, samples from various substrates and locations were collected.

Physical samples are retained at the office of Sanders & Czapski Associates, Marquette, Michigan, but will be turned over to the Grand Haven Lighthouse Conservancy for safekeeping.

The Entrance and Inner Lights and Catwalk were tested for lead base paints in July 2011 by Performance Environmental Services, Inc. in Wixom, Michigan. The “Lead Inspection Report” dated 7/26/2011 is included in this Appendix.

INNER LIGHT TOWER					
SAMPLE NO.	INTERIOR	EXTERIOR	LOCATION	ELEMENT	SUBSTRATE
1	•		Lantern	Floor	Metal
2	•		Lantern	Door Frame	Metal
3	•		Lantern	Ceiling	Metal
4	•		Level L-3 Ceiling	Ceiling	Plaster
5	•		Level L-3	Floor	Metal
6	•		Level L-3	Stair Tread	Metal
7	•		Level L-2	Floor	Metal
8	•		Level L-2	Stair Tread	Metal
9	•		Level L-1	Wall	Metal
10		•	Level L-1	Exterior Wall	Metal
11		•	Lantern Deck	Guardrail	Metal
11a		•	Concrete Base	Structure Base	Concrete
12		•	Lantern	Exterior Wall	Metal
13		•	Lantern	Roof	Metal

Welsh Color & Conservation, Inc.
Analysis of Historic Paints and Wallpapers

P.O. Box 767
Bryn Mawr, PA 19010-0767
Tel: 610-525-3564
E-mail: fswelsh@welshcolor.com
Website: www.welshcolor.com

March 25, 2014

Mr. Ken Czapski, AIA
Sanders & Czapski Associates, PLLC
109 South Front Street
Suite 210
Marquette, MI 49855

Re: Grand Haven Inner Lighthouse

Dear Ken:

We received 14 paint samples from your firm from the Grand Haven Inner Lighthouse constructed in 1904. The samples are from both the exterior and interior. We conducted a stereomicroscopical analysis of each sample to determine the layer structure and the original color of the ca. 1922 finish coats, which is the period of historic significance.

Our analyses and color evaluation disclose that a majority of the samples exhibit good paint layer evidence. Following our preliminary inspection of your samples in the lab, the notes for which we sent to you earlier, we selected the best ones to evaluate for colors of the ca.1922 finishes. We matched these period colors to the Munsell color system.

On the exterior, the ca. 1922 paint colors are as follows:

- Samples IL-10 and 11a (metal wall and concrete): Deep Red, 7.5 R 3/10,
- Sample IL-11 and 13 (metal railing and roof): Black, N 1.0/,

On the interior, the ca. 1922 paint colors are as follows:

- Samples IL-2, 3 & 4 (various wood and plaster features): 5 Y 9/0.5.
- No other original/ca. 1922 color evidence existed on the remaining submitted samples.

A sample of each color is attached in the tables below.

Feature: Exterior	Color: Deep Red Finish Type: Oil Reflectance: Gloss	Color sample: The Munsell Color notation is: <u>7.5 R 3/10</u>

Feature: Interior	Color: White Finish Type: Oil Reflectance: Semi-Gloss	Color sample: The Munsell Color notation is: 5 Y 9/0.5

On our website, http://welshcolor.com/matching.html, we provide additional information on color matching new paint. If you have any follow-up questions or need additional color samples, please call me.

Sincerely,

Frank S. Welsh

Frank S. Welsh

ENTRANCE LIGHT BUILDING					
SAMPLE NO.	INTERIOR	EXTERIOR	LOCATION	ELEMENT	SUBSTRATE
14	•		Upper Level	Floor	Concrete
15	•		Upper Level	Curb	Concrete
16	•		Upper Level	Stair	Wood
17	NOT USED				
18	•		Attic Level	Ceiling	Metal
19	•		Attic Level	Door Frame	Wood
20	•		Attic Level	Ceiling at Ladder	Metal
21	•		Attic Level	Catwalk Floor	Wood
22	•		Lantern Service Rm	Wall Paneling	Wood
23	•		Lantern	Wall Paneling	Wood
24	•		Lantern	Floor	Wood
25	•		Lantern	Window Sill	Metal
26	•		Lantern	Ceiling	Metal
27		•	Lantern	Exterior Wall	Metal
28		•	Lantern	Roof	Metal
29		•	Lantern Deck	Guardrail	Metal
30		•	Upper Level	Exterior Wall	Corrugated Metal Siding
31		•	Upper Level	Floor Deck	Concrete
32		•	Upper Level	Guardrail	Metal
33	•		Pier Deck Level	Wall	Glazed Tile
34	•		Pier Deck Level	Wall	Concrete
35	•		Pier Deck Level	Equipment Tank	Metal
36	•		Pier Deck Level	Door Frame	Wood
37		•	Upper Level	Curb	Concrete
38	•		Pier Deck Level	Ceiling	Concrete
39		•	Pier Deck Level	Exterior Wall	Concrete

Welsh Color & Conservation, Inc.
Analysis of Historic Paints and Wallpapers

P.O. Box 767
Bryn Mawr, PA 19010-0767
Tel: 610-525-3564
E-mail: fswelsh@welshcolor.com
Website: www.welshcolor.com

March 25, 2014

Mr. Ken Czapski, AIA
Sanders & Czapski Associates, PLLC
109 South Front Street
Suite 210
Marquette, MI 49855

Re: Grand Haven Entrance Lighthouse

Dear Ken:

We received 26 paint samples from your firm from the Grand Haven Entrance Lighthouse constructed in 1875 with major modifications in 1922. The samples are from both the exterior and interior. We conducted a stereomicroscopical analysis of each sample to determine the layer structure and the color of the ca. 1922 finish coats, which is the period of historic significance.

Our analyses and color evaluation disclose that most of the samples exhibit good-to-average paint layer evidence. Following our preliminary inspection of your samples in the lab, the notes for which we sent to you earlier, we selected the best ones to evaluate for colors of the finish coats that we felt represent the ca.1922 period. We matched these colors to the Munsell color system.

On the exterior, only samples EL-28, 29 and 32 exhibit evidence that appears credible enough to evaluate. All of these show early 20th century finishes of black paint – N 1.0/.

On the interior, sample EL-14, from concrete floor shows many grays – the earliest of which is close to 5 B 5/1. Many samples, such as EL-19, 20, 22, 36 and 38, show several or multiple white paint layers, all of which are close to 5 Y 9/0.5. Several others (EL-26 & 35) show blacks, N 1.0/, as early finishes. Sample EL-21, from a wood walkway floor has several early dark browns that are close to 2.5 YR 2.5/2. Sample EL-16, from a wood stair tread, shows an initial coat of a strong orange red, 7.5 R 4/10 that has a top coat of a black resinous coating close to 10 R 2/0.5, which is a color midway between N 2.0/ and 10 R 2/1. This dual coating system is typical of a graining finish; however, it may not be such in this instance since the surface is a stair tread. It is virtually impossible to determine the finished appearance of these combined coatings by inspecting only small samples in the lab.

Samples of all colors mentioned above are attached in the tables below. No other color evidence for the period of historical significance existed on the submitted samples.

Feature: Exterior & Interior	Color: Black Finish Type: Oil Reflectance: Gloss	Color sample: The Munsell Color notation is: N 1.0/

Feature: Interior	Color: Gray Finish Type: Oil Reflectance: Gloss	Color sample: The Munsell Color notation is: 5 B 5/1

Feature: Interior	Color: White Finish Type: Oil Reflectance: Semi-Gloss	Color sample: The Munsell Color notation is: 5 Y 9/0.5

Feature: Interior

Color: Dark Brown
Finish Type: Oil
Reflectance: Gloss

Color sample:

The Munsell Color notation is:

2.5 YR 2.5/2

Feature: Interior

Color: Reddish Orange
Finish Type: Oil
Reflectance: Low-Gloss

Color sample:

The Munsell Color notation is:

7.5 R 4/10

Feature: Interior

Color: Black
Finish Type: Oil
Reflectance: Gloss

Color sample:

The Munsell Color notation is approximately 10 R 2/0.5 which is midway between:

N 2.0/ and 10 R 2/1

On our website, http://welshcolor.com/matching.html, we provide additional information on color matching new paint. If you have any follow-up questions or need additional color samples, please call me.

Sincerely,

Frank S. Welsh

Frank S. Welsh

APPENDIX E

HAZARDOUS MATERIAL TEST REPORT

PERFORMANCE
Environmental Services, Inc.
30553 Wixom Road, Suite 500 • Wixom, Michigan 48393 • Voice: 248.926.3800 • Fax: 248.926.3838
One Oxford Centre, 301 Grant Street, Suite 4301 • Pittsburgh, PA 15219 • Voice: 412.577.2497 • Fax: 412.255.3701

LEAD INSPECTION REPORT

FOR THE:

Lighthouse Entrance, Inner Lights and Catwalk
Grand Haven, Michigan
Performance Project # 111420-A

PREPARED FOR:

The Grand Haven Light House Conservancy
City of Grand Haven
519 Washington Ave.
Grand Haven, MI 49417

REPORT PREPARED AND SUBMITTED BY:

Mr. Walter Horne
Certified Lead Inspector P-03859
Performance Environmental Services, Inc.
30553 Wixom Road, Suite 500
Wixom, Michigan 48393
Phone: 248.926.3800
Email: performance.reports@perform-env.com

DATE OF INSPECTION:
7/13/2011

DATE OF REPORT:
7/26/2011

TABLE OF CONTENTS

1.0 PURPOSE 3
2.0 CONCLUSIONS 3
2.1 Report Summary 3
2.2 Positive XRF Readings 3
3.0 SITE DESCRIPTION 5
4.0 BACKGROUND INFORMATION AND EDUCATIONAL INFORMATION 5
4.1 Health Effects of Lead Exposure 5
4.2 Sources of Lead Poisoning 5
4.3 Methods to Reduce Exposure the Lead Hazards 6
5.0 ADDITIONAL RESOURCES 6
6.0 CERTIFICATION 7
7.0 SAMPLING PROCEDURES BY XRF ANALYSIS 7
APPENDIX ..... SITE MAP

1.0 PURPOSE

The purpose of the investigation was to determine the existence of lead-based paint at the subject property.

The following report details the results of the investigation. A summary of this report must be provided to each new lessee (tenant) or purchaser of this property under federal law (40 CFR part 745) before they become obligated under a lease or sales contract. The complete report must also be provided to purchasers and made available to tenants. Landlords (lessors) and sellers are also required to distribute an educational pamphlet approved by the U.S. Department of Housing and Urban Development (HUD) and the U.S. Environmental Protection Agency (EPA), entitled *"Renovate Right"*, and include standard warning language in their leases or sales contracts to ensure that parents have the information they need to protect their children from lead-based paint hazards. If details on lead-based paint hazards are necessary or required, a Lead Risk Assessment must be completed following all applicable regulations. For more information regarding your obligations under federal lead-based paint regulations, contact 800-424-LEAD (5323).

2.0 CONCLUSIONS

2.1 Report Summary

A visual inspection of the property was conducted at the start of the lead-based paint inspection. The property was unoccupied and found to be in fair condition.

The XRF data revealed lead-based paint on several components (refer to section 2.2). All renovation, remodeling and repair activities to these components, whether performed by the owner or a contractor, should employ lead safe work practices.

2.2 Positive XRF Readings

Reading #	Component	Substrate	Side	Condition	Color	Floor	Room Type	Result (mg/cm^2)
208	WALL	METAL	A	INTACT	RED	FIRST	OUTSIDE-INNER LTS	6.8
209	WALL	METAL	B	INTACT	RED	FIRST	OUTSIDE-INNER LTS	4.5
210	WALL	METAL	C	INTACT	RED	FIRST	OUTSIDE-INNER LTS	8.1
211	WALL	METAL	D	INTACT	RED	FIRST	OUTSIDE-INNER LTS	5.7
215	DOOR	METAL	A	INTACT	RED	FIRST	OUTSIDE-INNER LTS	1
216	WALL	METAL	A	INTACT	RED	FIRST	INTERIOR-INNER LTS	3.1
217	WALL	METAL	B	INTACT	RED	FIRST	INTERIOR-INNER LTS	2.8
218	WALL	METAL	C	INTACT	RED	FIRST	INTERIOR-INNER LTS	2
219	WALL	METAL	D	INTACT	RED	FIRST	INTERIOR-INNER LTS	3

Reading #	Component	Substrate	Side	Condition	Color	Floor	Room Type	Result (mg/cm^2)
220	STRINGER	METAL	C	POOR	GREY	FIRST	INTERIOR-INNER LTS	1.2
221	RAIL	METAL	C	INTACT	RED	FIRST	INTERIOR-INNER LTS	6.8
223	WALL	METAL	B	INTACT	RED	SECOND	INTERIOR-INNER LTS	4.3
224	RAIL	METAL	B	INTACT	RED	SECOND	INTERIOR-INNER LTS	3.4
225	TREAD	METAL	B	INTACT	RED	SECOND	INTERIOR-INNER LTS	2.8
226	WALL	METAL	A	INTACT	RED	THIRD	INTERIOR-INNER LTS	5.9
227	WALL	METAL	B	INTACT	RED	THIRD	INTERIOR-INNER LTS	5.2
228	WALL	METAL	C	INTACT	RED	THIRD	INTERIOR-INNER LTS	3.1
229	WALL	METAL	D	INTACT	RED	THIRD	INTERIOR-INNER LTS	5.6
230	LADDER	METAL	A	INTACT	RED	THIRD	INTERIOR-INNER LTS	1.9
232	CEILING	CONCRETE	CEILING	POOR	RED	THIRD	INTERIOR-INNER LTS	7.5
233	WALL	METAL	A	INTACT	WHITE	LIGHT DECK	INTERIOR-INNER LTS	4.2
234	WALL	METAL	B	INTACT	WHITE	LIGHT DECK	INTERIOR-INNER LTS	3.3
235	WALL	METAL	C	INTACT	WHITE	LIGHT DECK	INTERIOR-INNER LTS	3.1
236	WALL	METAL	D	INTACT	WHITE	LIGHT DECK	INTERIOR-INNER LTS	3.4
240	RAIL	CONCRETE	A	INTACT	BLACK	FIRST	EXTERIOR-OUTER LTS	5.3
245	WALL	METAL	D	INTACT	BLACK	FIRST	EXTERIOR-OUTER LTS	3
255	WALL	METAL	D	POOR	GREY	FIRST	INT-OUTER LTS-RM 1	2.2
260	WALL	CONCRETE	D	POOR	WHITE	FIRST	INT-OUTER LTS-RM 2	2.4
264	WALL	CONCRETE	D	POOR	GREY	FIRST	INT-OUTER LTS-RM 2	3.3
265	CEILING	CONCRETE	CEILING	POOR	WHITE	FIRST	INT-OUTER LTS-RM 2	3.1
266	DOOR JAMB	WOOD	A	INTACT	GREY	FIRST	INT-OUTER LTS-RM 2	5.9
268	DOOR CASING	WOOD	B	INTACT	GREY	FIRST	INT-OUTER LTS-RM 2	1.3
269	DOOR CASING	WOOD	C	INTACT	GREY	FIRST	INT-OUTER LTS-RM 2	3.6
274	WALL	CONCRETE	C	INTACT	WHITE	FIRST	INT-OUTER LTS-RM 4	3
276	WALL	CONCRETE	C	POOR	WHITE	FIRST	INT-OUTER LTS-RM 4	3.8
279	RAIL	METAL	C	INTACT	BLACK	FIRST	INT-OUTER LTS-RM 4	8
281	RAIL	METAL	A	POOR	RED	FIRST	INT-OUTER LTS-RM 5	7.1
285	WALL	METAL	A	CRACKED	BEIGE	THIRD	INT-OUTER LTS-RM 5	6.5

Reading #	Component	Substrate	Side	Condition	Color	Floor	Room Type	Result (mg/cm^2)
287	DOOR CASING	METAL	B	CRACKED	BEIGE	THIRD	INT-OUTER LTS-RM 5	10.4
288	DOOR CASING	METAL	D	CRACKED	BEIGE	THIRD	INT-OUTER LTS-RM 5	6.1
291	WALL	WOOD	A	INTACT	WHITE	THIRD	INT-OUTER LTS-RM 5	22.2
292	WALL	WOOD	B	INTACT	WHITE	THIRD	INT-OUTER LTS-RM 5	22.5
294	WALL	WOOD	D	INTACT	WHITE	THIRD	INT-OUTER LTS-RM 5	8.3
297	DOOR CASING	WOOD	A	INTACT	GREY	THIRD	INT-OUTER LTS-RM 5	11
298	LADDER	WOOD	D	INTACT	YELLOW	THIRD	INT-OUTER LTS-RM 5	1.9
299	LADDER	WOOD	D	POOR	YELLOW	THIRD	INT-OUTER LTS-RM 5	1.8
300	LADDER	WOOD	D	POOR	BLACK	THIRD	INT-OUTER LTS-RM 5	1.3
303	CEILING	METAL	CEILING	CHALKING	WHITE	LIGHT DECK	INT-OUTER LTS-RM 6	1.9

3.0 SITE DESCRIPTION

The site is composed of two lighthouses and a catwalk located in Grand Haven, Michigan. The property is unoccupied and in fair condition.

4.0 BACKGROUND INFORMATION AND EDUCATIONAL INFORMATION

4.1 Health Effects of Lead Exposure

Lead is a soft metal, naturally occurring in the Earth's crust. It has been determined; however, that lead has no useful purpose in the human body, and acts as a toxin. It takes the place of essential minerals such as calcium, potassium, and iron, which are vital to the construction and repair of bones, organs and blood. Lead exposures have become a major health concern, especially in young children under the age of six.

Children, due to their smaller body mass and higher metabolism, are affected by lead exposures much more severely than adults. They ingest lead through daily hand-to-mouth activities and may develop severe attention deficit disorders, irreversible brain injury, learning disabilities and aggressive behaviors. The symptoms of lead poisoning often mimic other afflictions such as flu, colic or general malaise. It is important to have young children's blood tested for lead burden.

4.2 Sources of Lead Poisoning

Since lead is ingested by routine daily activities such as eating, playing and working, it is important to understand the sources of lead exposures. The most common places to find lead in household settings are interior and exterior paint, and contaminated dust or soil. Lead-based paint is most hazardous when it is chipping, peeling, cracking, or chalking; or applied to friction surfaces of

components such as doors, windows, and floors. The abrasive action of painted surfaces rubbing together causes lead-containing paints to be ground into a fine dust. Lead dust can also be created from decaying vinyl mini blinds. Lead dust then settles on furniture, play area floors, and children's toys, where children are exposed during regular activities.

Several other sources of lead in the home include lead dust brought into the home from occupational exposures, water pipes, fixtures, and joints; decorative china, "leaded" crystal, fishing lures and sinkers, firearms ammunition, wine bottles and cosmetics. Some hobbies may also contribute to lead contamination within the home. Exposures to all sources of lead should be minimized or eliminated.

4.3 Methods to Reduce Exposure the Lead Hazards

The simplest and often most effective way to reduce lead exposures is through regular washing of hands, toys, and horizontal surfaces in the home with a liquid hand soap or dish soap and water. It is highly recommended that disposable cleaning materials be used to wash surfaces, so as not to re-contaminate them with a used mop or cloth.

Other ways of reducing lead hazards within the home include taking shoes off before entering living areas, letting water run prior to drinking or cooking, covering exposed soil with plant materials, and vacuuming with a High Efficiency Particulate Air (HEPA) filtered vacuum.

For more information regarding lead poisoning and prevention, contact your local health department or the National Lead Information Center [800-424-LEAD (5323)]. Contact the Michigan Department of Community Health, Lead Hazard Remediation Program at 866-691-5323 for information regarding lead hazard remediation or selection of qualified lead professionals.

5.0 ADDITIONAL RESOURCES

For further information regarding lead-based paint hazards and poisoning prevention, consult the following resources:

CONTACTS

National Lead Information Center: 800-424-LEAD (5323)
U.S. Department of Housing and Urban Development: ..... 888-532-3547 (LEADLIST)
State of Michigan – Healthy Homes Section:..... 866-691-LEAD (5323)

PUBLICATIONS

"Lead in Your Home: A Parent's Reference Guide" EPA
"Renovate Right" EPA
"Lead Paint Safety: A Field Guide for Painting, Home Maintenance, and Renovation Work" HUD

WEB SITES:

- Michigan Dept. of Community Health – Healthy Homes Section www.michigan.gov/leadsafe
- HUD – Office of Healthy Homes and Lead Hazard Control www.hud.gov/offices/lead
- EPA – Lead Offices www.epa.gov/lead
- National Safety Council www.nsc.org/issues/lead

6.0 CERTIFICATION

The information contained in this report is a true and accurate representation of the lead-based paint at the subject property at the time of the investigation, based on the professional judgment of the person(s) who conducted and reported this lead-based paint inspection:

Mr. Walter Horne

(Michigan Registered Lead Inspector, P-**03859**)

7.0 SAMPLING PROCEDURES BY XRF ANALYSIS

The instrument used for this lead inspection was an X-ray fluorescence unit (XRF) manufactured by NITON (XLp300A-15550). The unit was operated according to Performance Characteristic Sheet recommendations. XRF technology utilizes low level radiation to excite atoms within painted surfaces. The XRF unit interprets the gamma radiation rebound to determine whether or not lead is present and if so to what degree. If the unit detects lead at the HUD defined threshold limit of 1.0 $\mu g/cm^2$ or more, then a positive reading is reported.

HOW TO INTERPRET XRF READINGS:

There are nine columns in the XRF table. The interpretation of each column is as follows:

Column 1 – Reading #: This is simply the shot number that was taken during the inspection. The number may not start at "1" if XRF shots from previous inspections are still in the XRF device.

Column 2 – Component: This is the type of component being tested with the XRF (e.g. wall, door, etc.).

Column 3 – Substrate: This column defines what material the paint was applied to. Substrates are most commonly plaster or wood but could be another material such as metal.

Column 4 – Side: This column determines where the item being tested is located in the room. Side A is always the *address side* of the building. Then, proceeding in a clockwise direction the adjacent sides are labeled B, C and D. Sides A, B, C and D are identified on the Floor Plan. For example, if you were standing in a bedroom that had two windows on different walls these windows would be identified by the side location such as Window Side A and Window Side B.

Column 5 – Color: This is the color of the surface of the component being tested with the XRF.

Column 6 – Floor: This simply corresponds to the floor of the building. Basements are identified as "floor 0".

Column 7 – Room Type: This column identifies a description of the room where XRF testing occurred. This helps to know where you are in the building.

Column 8 – Result: This column indicates whether or not the paint tested Positive or Negative for the presence of lead.

Column 9 – XRF Data: This column provides the actual XRF test result in mg/cm^2.

The following table details all XRF sample results.

The NITON XRF machine with serial number XLp300a 15550 was utilized for this inspection.

READING #	COMPONENT	SUBSTRATE	SIDE	COLOR	FLOOR	ROOM TYPE	RESULT	XRF DATA (mg/cm^2)
203			CALIBRATE					0
204			CALIBRATE					0.9
205			CALIBRATE					1.4
206	CATWALK	METAL	A	BLACK	FIRST	OUTSIDE	Negative	0
207	CATWALK	METAL	A	BLACK	FIRST	OUTSIDE	Negative	0
208	WALL	METAL	A	RED	FIRST	OUTSIDE-INNER LTS	Positive	6.8
209	WALL	METAL	B	RED	FIRST	OUTSIDE-INNER LTS	Positive	4.5
210	WALL	METAL	C	RED	FIRST	OUTSIDE-INNER LTS	Positive	8.1
211	WALL	METAL	D	RED	FIRST	OUTSIDE-INNER LTS	Positive	5.7
212	BASE	CONCRETE	A	GREY	FIRST	OUTSIDE-INNER LTS	Negative	0.13
213	DOOR	METAL	A	RED	FIRST	OUTSIDE-INNER LTS	Negative	1
214	DOOR	METAL	A	RED	FIRST	OUTSIDE-INNER LTS	Negative	0.9
215	DOOR	METAL	A	RED	FIRST	OUTSIDE-INNER LTS	Positive	1
216	WALL	METAL	A	RED	FIRST	INTERIOR-INNER LTS	Positive	3.1
217	WALL	METAL	B	RED	FIRST	INTERIOR-INNER LTS	Positive	2.8
218	WALL	METAL	C	RED	FIRST	INTERIOR-INNER LTS	Positive	2
219	WALL	METAL	D	RED	FIRST	INTERIOR-INNER LTS	Positive	3
220	STRINGER	METAL	C	GREY	FIRST	INTERIOR-INNER LTS	Positive	1.2
221	RAIL	METAL	C	RED	FIRST	INTERIOR-INNER LTS	Positive	6.8
222	WALL	METAL	A	RED	SECOND	INTERIOR-INNER LTS	Negative	0
223	WALL	METAL	B	RED	SECOND	INTERIOR-INNER LTS	Positive	4.3
224	RAIL	METAL	B	RED	SECOND	INTERIOR-INNER LTS	Positive	3.4
225	TREAD	METAL	B	RED	SECOND	INTERIOR-INNER LTS	Positive	2.8
226	WALL	METAL	A	RED	THIRD	INTERIOR-INNER LTS	Positive	5.9
227	WALL	METAL	B	RED	THIRD	INTERIOR-INNER LTS	Positive	5.2
228	WALL	METAL	C	RED	THIRD	INTERIOR-INNER LTS	Positive	3.1
229	WALL	METAL	D	RED	THIRD	INTERIOR-INNER LTS	Positive	5.6

READING #	COMPONENT	SUBSTRATE	SIDE	COLOR	FLOOR	ROOM TYPE	RESULT	XRF DATA (mg/cm^2)
230	LADDER	METAL	A	RED	THIRD	INTERIOR-INNER LTS	Positive	1.9
231	FLOOR	METAL	A	RED	THIRD	INTERIOR-INNER LTS	Negative	0.01
232	CEILING	CONCRETE	CEILING	RED	THIRD	INTERIOR-INNER LTS	Positive	7.5
233	WALL	METAL	A	WHITE	LIGHT DECK	INTERIOR-INNER LTS	Positive	4.2
234	WALL	METAL	B	WHITE	LIGHT DECK	INTERIOR-INNER LTS	Positive	3.3
235	WALL	METAL	C	WHITE	LIGHT DECK	INTERIOR-INNER LTS	Positive	3.1
236	WALL	METAL	D	WHITE	LIGHT DECK	INTERIOR-INNER LTS	Positive	3.4
237	LIGHT POST	METAL	CENTER	BLACK	LIGHT DECK	INTERIOR-INNER LTS	Negative	0
238	CATWALK	METAL	CENTER	BLACK	LIGHT DECK	INTERIOR-INNER LTS	Negative	0
239	WALL	CONCRETE	A	GREY	FIRST	EXTERIOR-OUTER LTS	Negative	0.06
240	RAIL	CONCRETE	A	BLACK	FIRST	EXTERIOR-OUTER LTS	Positive	5.3
241	TREAD	CONCRETE	A	GREY	FIRST	EXTERIOR-OUTER LTS	Negative	0.03
242	WALL	CONCRETE	B	GREY	FIRST	EXTERIOR-OUTER LTS	Negative	0.26
243	WALL	CONCRETE	C	GREY	FIRST	EXTERIOR-OUTER LTS	Negative	0.03
244	WALL	CONCRETE	D	GREY	FIRST	EXTERIOR-OUTER LTS	Negative	0.2
245	WALL	METAL	D	BLACK	FIRST	EXTERIOR-OUTER LTS	Positive	3
246	DOOR	METAL	A	BLACK	FIRST	EXTERIOR-OUTER LTS	Negative	0
247	WALL	CONCRETE	A	WHITE	FIRST	INT-OUTER LTS-RM 1	Negative	0.22
248	WALL	CONCRETE	A	GREY	FIRST	INT-OUTER LTS-RM 1	Negative	0.24
249	WALL	CONCRETE	B	GREY	FIRST	INT-OUTER LTS-RM 1	Negative	0.15
250	WALL	CONCRETE	B	WHITE	FIRST	INT-OUTER LTS-RM 1	Negative	0.4
251	WALL	CONCRETE	C	WHITE	FIRST	INT-OUTER LTS-RM 1	Negative	0.09
252	WALL	CONCRETE	C	GREY	FIRST	INT-OUTER LTS-RM 1	Negative	0.18
253	WALL	CONCRETE	D	GREY	FIRST	INT-OUTER LTS-RM 1	Negative	0.14
254	WALL	CONCRETE	D	WHITE	FIRST	INT-OUTER LTS-RM 1	Negative	0.17
255	WALL	METAL	D	GREY	FIRST	INT-OUTER LTS-RM 1	Positive	2.2
256	CEILING	CONCRETE	CEILING	WHITE	FIRST	INT-OUTER LTS-RM 1	Negative	0.04

READING #	COMPONENT	SUBSTRATE	SIDE	COLOR	FLOOR	ROOM TYPE	RESULT	XRF DATA (mg/cm^2)
257	WALL	CONCRETE	A	WHITE	FIRST	INT-OUTER LTS-RM 2	Negative	0.4
258	WALL	CONCRETE	B	WHITE	FIRST	INT-OUTER LTS-RM 2	Negative	0.3
259	WALL	CONCRETE	C	WHITE	FIRST	INT-OUTER LTS-RM 2	Negative	0.25
260	WALL	CONCRETE	D	WHITE	FIRST	INT-OUTER LTS-RM 2	Positive	2.4
261	WALL	CONCRETE	A	GREY	FIRST	INT-OUTER LTS-RM 2	Negative	0.21
262	WALL	CONCRETE	B	GREY	FIRST	INT-OUTER LTS-RM 2	Negative	0.4
263	WALL	CONCRETE	C	GREY	FIRST	INT-OUTER LTS-RM 2	Negative	0.3
264	WALL	CONCRETE	D	GREY	FIRST	INT-OUTER LTS-RM 2	Positive	3.3
265	CEILING	CONCRETE	CEILING	WHITE	FIRST	INT-OUTER LTS-RM 2	Positive	3.1
266	DOOR JAMB	WOOD	A	GREY	FIRST	INT-OUTER LTS-RM 2	Positive	5.9
267	DOOR JAMB	WOOD	B	GREY	FIRST	INT-OUTER LTS-RM 2	Negative	0.14
268	DOOR CASING	WOOD	B	GREY	FIRST	INT-OUTER LTS-RM 2	Positive	1.3
269	DOOR CASING	WOOD	C	GREY	FIRST	INT-OUTER LTS-RM 2	Positive	3.6
270	WALL	CONCRETE	A	RED	FIRST	INT-OUTER LTS-RM 3	Negative	0.07
271	WALL	CONCRETE	A	WHITE	FIRST	INT-OUTER LTS-RM 4	Negative	0.04
272	WALL	CONCRETE	B	WHITE	FIRST	INT-OUTER LTS-RM 4	Negative	0.14
273	WALL	CONCRETE	B	GREY	FIRST	INT-OUTER LTS-RM 4	Negative	0.21
274	WALL	CONCRETE	C	WHITE	FIRST	INT-OUTER LTS-RM 4	Positive	3
275	WALL	CONCRETE	D	WHITE	FIRST	INT-OUTER LTS-RM 4	Negative	0.05
276	WALL	CONCRETE	C	WHITE	FIRST	INT-OUTER LTS-RM 4	Positive	3.8
277	DOOR CASING	WOOD	D	GREY	FIRST	INT-OUTER LTS-RM 4	Negative	0.09
278	DOOR CASING	WOOD	D	GREY	FIRST	INT-OUTER LTS-RM 4	Negative	0.19
279	RAIL	CONCRETE	C	BLACK	FIRST	INT-OUTER LTS-RM 4	Positive	8
280	WALL	CONCRETE	A	WHITE	FIRST	INT-OUTER LTS-RM 4	Negative	0
281	RAIL	METAL	A	RED	FIRST	INT-OUTER LTS-RM 5	Positive	7.1
282	TREAD	WOOD	C	GREY	FIRST	INT-OUTER LTS-RM 5	Negative	0.18
283	STRINGER	WOOD	C	GREY	FIRST	INT-OUTER LTS-RM 5	Negative	0.1
284	COLUMN	METAL	C	SILVER	FIRST	INT-OUTER LTS-RM 5	Negative	0
285	WALL	METAL	A	BEIGE	THIRD	INT-OUTER LTS-RM 5	Positive	6.5

READING #	COMPONENT	SUBSTRATE	SIDE	COLOR	FLOOR	ROOM TYPE	RESULT	XRF DATA (mg/cm^2)
286	DOOR CASING	METAL	A	BEIGE	THIRD	INT-OUTER LTS-RM 5	Negative	0.3
287	DOOR CASING	METAL	B	BEIGE	THIRD	INT-OUTER LTS-RM 5	Positive	10.4
288	DOOR CASING	METAL	D	BEIGE	THIRD	INT-OUTER LTS-RM 5	Positive	6.1
289	CEILING	METAL	CEILING	BEIGE	THIRD	INT-OUTER LTS-RM 5	Negative	0.25
290	CEILING	METAL	CEILING	BEIGE	THIRD	INT-OUTER LTS-RM 5	Negative	0.3
291	WALL	WOOD	A	WHITE	THIRD	INT-OUTER LTS-RM 5	Positive	22.2
292	WALL	WOOD	B	WHITE	THIRD	INT-OUTER LTS-RM 5	Positive	22.5
293	WALL	WOOD	C	WHITE	THIRD	INT-OUTER LTS-RM 5	Negative	0.11
294	WALL	WOOD	D	WHITE	THIRD	INT-OUTER LTS-RM 5	Positive	8.3
295	CEILING	WOOD	CEILING	WHITE	THIRD	INT-OUTER LTS-RM 5	Negative	0.02
296	CEILING	WOOD	CEILING	WHITE	THIRD	INT-OUTER LTS-RM 5	Negative	0.02
297	DOOR CASING	WOOD	A	GREY	THIRD	INT-OUTER LTS-RM 5	Positive	11
298	LADDER	WOOD	D	YELLOW	THIRD	INT-OUTER LTS-RM 5	Positive	1.9
299	LADDER	WOOD	D	YELLOW	THIRD	INT-OUTER LTS-RM 5	Positive	1.8
300	LADDER	WOOD	D	BLACK	THIRD	INT-OUTER LTS-RM 5	Positive	1.3
301	WALL	WOOD	A	WHITE	LIGHT DECK	INT-OUTER LTS-RM 6	Negative	0.02
302	WALL	WOOD	C	WHITE	LIGHT DECK	INT-OUTER LTS-RM 6	Negative	0.01
303	CEILING	METAL	CEILING	WHITE	LIGHT DECK	INT-OUTER LTS-RM 6	Positive	1.9
304	FLOOR	WOOD	FLOOR	BLACK	LIGHT DECK	INT-OUTER LTS-RM 6	Negative	0.13
305	LIGHT POLE	METAL	FLOOR	BLACK	LIGHT DECK	INT-OUTER LTS-RM 6	Negative	0.3
306	DOOR	METAL	A	WHITE	LIGHT DECK	INT-OUTER LTS-RM 6	Negative	0.18
307			CALIBRATE					0
308			CALIBRATE					0.9
309			CALIBRATE					3.7

APPENDIX

SITE MAP

PERFORMANCE
Environmental Services, Inc.

Performance Environmental Services, Inc.
30553 Wixom Road, Suite 500
Wixom, MI 48393
(248) 926.3800
fax (248) 926.3838

Project Number:	111420
Project Name:	Entrance, Inner Lights and Catwalk
Date:	7/13/2011
Location:	Grand Haven, MI
Technician:	Walter Horne

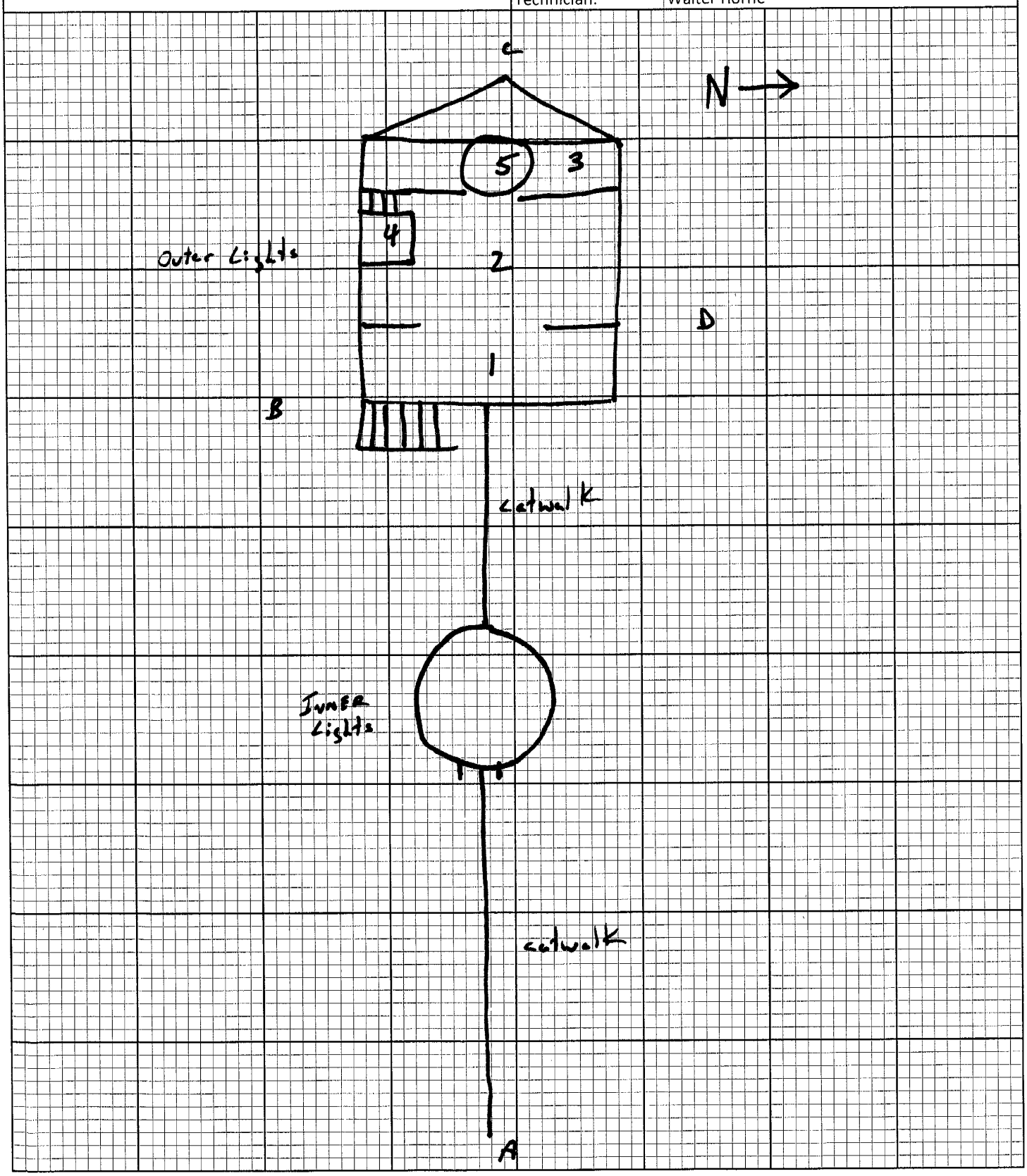

HAZARDOUS MATERIAL

Both the Entrance and Inner Lights were examined for potential hazardous material. Remnants of a fibrous insulation material located below the catwalk floor of the Entrance Light was discovered as the only suspect material. Samples were collected and analyzed. Test report indicates the insulation as a cellulose fiber material containing no asbestos.

SCHNEIDER LABORATORIES GLOBAL

I N C O R P O R A T E D

2512 W. Cary Street • Richmond, Virginia • 23220-5117

804-353-6778 • 800-785-LABS (5227) • (FAX) 804-359-1475

Over 25 Years of Excellence in Service and Technology

AIHA/ELLAP 100527, ISO/IEC 17025, NVLAP 101150-0, VELAP 460135, NYELAP/NELAC 11413

LABORATORY ANALYSIS REPORT

Asbestos Identification by EPA Method[1] 600/R-93/116 with Point Count; EPA 600/M4-82-020

ACCOUNT #:	2716-13-593	**DATE COLLECTED:**	4/20/2013
CLIENT:	UP Engineers & Architects, Inc.	**DATE RECEIVED:**	8/16/2013
ADDRESS:	424 South Pine Street	**DATE ANALYZED:**	8/18/2013
	Ishpeming, MI 49849	**DATE REPORTED:**	8/19/2013
PROJECT NAME:	Sanders-Czapski		
JOB LOCATION:	Grand Haven S Pier		
PROJECT NO.:	U31-13133		
PO NO.:		**SampleType:**	Bulk

Client Sample No.	SLI Sample/ Layer ID	Sample Identification/ Layer Name	PLM Analysis Results: Asbestos Fibers	PLM Analysis Results: Other Materials
	31989471	Attic/Ceiling Insulation		
Layer 1:	Insulation Tan, Fibrous		None Detected	80% CELLULOSE FIBER 20% NON FIBROUS MATERIAL

Analyst: **SAMANI ABDELFADIEL**

Reviewed By: **Johnathan Wilson, Analyst**

Total Number of Pages in Report: 1

Results relate only to samples as received by the laboratory.

Visit www.slabinc.com for current certifications.

Method reporting limit is 1%. Gravimetric reduction and correlative analyses are recommended for floor coverings and all non-friable, organically bound materials. Quantitative TEM is currently the only method that can be used to determine if this material can be treated as non-asbestos containing. Negative or trace results on NOB samples by PLM are INCONCLUSIVE if the acid insoluble inorganic portion is greater than 1% of the sample. This report must not be reproduced except in full with the approval of the laboratory. The EPA states that any asbestos found in vermiculite is a concern and the sample should be treated as asbestos containing material.

Schneider Laboratories, Inc. 1/800-785-5227
2512 W. Cary Street, Richmond, VA 23220-5117

Submitting Co.
U.P. Engineers & Architects
424 S. Pine Street
Ishpeming, MI 49866

Lab Use-WO# 2716-13-593
Acct # 2716
Phone # (906) 485-1011
FAX # (906) 485-1013

Project Name Sanders-Czapski
Project Location: Grand Haven South Pier Entrance Light Building
Project Number U31-13133
Purchase Order No. N/A

Special Instructions [include requests for special reporting or data packages]

Turn Around Time	Matrix / Sample Type (Select ONE)	Tests / Analytes (Select ALL that Apply)			ORGANICS TESTS and other Analyses
[ ] 6-8 hours*	*All samples on form should be of SAME matrix type. Use additional forms as needed.*	**Asbestos Air / Fiber Counts**	**Asbestos Bulk / Asb ID**	**Metals-Total Conc.**	NOTE: All samples for organics should be kept at 4°C from collection until testing. Schedule rush analyses in advance. Indicate preservatives added & media type. Indicate *analysis method* for organics tests.
[ ] 24 hours*		[ ] PCM (NIOSH 7400)	[X] PLM (EPA 600, 1993)	[ ] Lead	
[ ] 48 hours*	[ ] Air [ ] Solid	[ ] TEM (AHERA)	[ ] PLM (EPA Point Count)	[ ] RCRA Metals	
[X] 72 hour*	[ ] Aqueous [ ] Waste	[ ] TEM (EPA Level II)	[ ] PLM (Qualitative only)	[ ] Cadmium	
[ ] STANDARD (5 days)	[ ] Bulk [ ] Wastewater	[ ]	[ ] NYELAP 198.1/.4	[ ]	
[ ] Standard Full TCLP (10d)	[ ] Hi-Vol Filter (PM10) [ ] Water,Drinking	**Miscellaneous Tests**	[ ] CAELAP (EPA Interim)	**Extraction Procedures**	
[ ] Weekend*	[ ] Hi-Vol Filter (TSP) [ ] Compliance	[ ] Total Dust (NIOSH 0500)	[ ] TEM (Chatfield)	[ ] TCLP / Lead	
[X] Per green post card	[ ] Oil [ ] Wipe	[ ] Resp. Dust (NIOSH 0600)	[ ]	[ ] TCLP / RCRA Metal Profile	
* not available for all tests	[ ] Paint [ ] Wipe, Composite	[ ] Silica - FTIR (NIOSH 7602)	**FOR ASBESTOS AIR:**	[ ] TCLP / FULL (w/ organics)	
Schedule rush organics, multi-metals & weekend tests in advance.	[ ] Sludge [ ]	[ ] Silica - XRD (NIOSH 7500)	TYPE OF RESPIRATOR USED:	[ ]	
	[ ] Soil [ ]	[ ]		[ ]	

WorkOrderKey
V : \ 971 \ 971410

Sample #	Date Sampled	Time	Sample Identification (e.g. Employee, SSN, Bldg, Material)	Wipes: Wiped Area (ft²)	Type[1] A,B,P,E	Time[2] Start	Time[2] Stop	Flow Rate[3] Start	Flow Rate[3] Stop	Total[4] Air Vol	Organics # containers
	04/20/13		Attic/ceiling Insulation material								

RECEIVED
AUG 16 2013
BY: TIMA OLAGEAIII
8:25
10:15

Type: A=area B=blank P=personal E=excursion *Beginning/End of Sample Period *Pump Calibration in Liters/Minute *Volume in Liters [time in min * flow in L/min]

Sample Collection & Custody Information

Sampled by [NAME] Ken Czapski [SIGNATURE] [DATE/TIME] 8/12/13
Relinquished by [NAME] Robb Cookman - UPEA [SIGNATURE] Robb Cookman [DATE/TIME] 8/13/2013 8/13/13
Received by [NAME] UPS [SIGNATURE] [DATE/TIME]
[ ]FX [ ]AB [X]UPS [ ]USM [ ]CL [ ]LG [ ]HD [ ]DB [ ]
Unusual Sample Condition Noted:

STATE where samples were collected: MI
[ ] Sample return requested
[ ] Ambient temp [ ] Cool ___°C [ ] pH ___ [ ] Cl ___
Waybill# [ ]R [ ]S
Chain-of-Custody documentation continued internally within lab.

LAB USE ONLY
Received in Lab by Date/Time [ ] Ambient Temp. [ ] Cool
[ ]FX [ ]AB [ ]UPS [ ]USM [ ]CL [ ]LG [ ]HD [ ]DB [ ]
Waybill# [ ]R [ ]S
Unusual Sample Condition Noted:

Sample Collection & Custody Information *Chain-of-custody documentation continued internally within lab.*
Sampled by [NAME] [SIGNATURE] [DATE/TIME]
Relinquished by [NAME] [SIGNATURE] [DATE/TIME]
[ ] Sample return requested [ ] **STATE from which samples were collected**

File:Czapski Grand Havent Schneider Asbestos COC~0813 2013.xls/Freeman

APPENDIX F

THE SECRETARY OF THE INTERIOR STANDARDS FOR THE TREATMENT OF HISTORIC PLACES

Preservation as a Treatment

Preservation is defined as the act or process of applying measures necessary to sustain the existing form, integrity, and materials of an historic property. Work, including preliminary measures to protect and stabilize the property, generally focuses upon the ongoing maintenance and repair of historic materials and features rather than extensive replacement and new construction. New exterior additions are not within the scope of this treatment; however, the limited and sensitive upgrading of mechanical, electrical, and plumbing systems and other code-required work to make properties functional is appropriate within a preservation project.

Standards for Preservation

1. A property will be used as it was historically, or be given a new use that maximizes the retention of distinctive materials, features, spaces, and spatial relationships. Where a treatment and use have not been identified, a property will be protected and, if necessary, stabilized until additional work may be undertaken.
2. The historic character of a property will be retained and preserved. The replacement of intact or repairable historic materials or alteration of features, spaces, and spatial relationships that characterize a property will be avoided.
3. Each property will be recognized as a physical record of its time, place, and use. Work needed to stabilize, consolidate, and conserve existing historic materials and features will be physically and visually compatible, identifiable upon close inspection, and properly documented for future research.
4. Changes to a property that have acquired historic significance in their own right will be retained and preserved.
5. Distinctive materials, features, finishes, and construction techniques or examples of craftsmanship that characterize a property will be preserved.
6. The existing condition of historic features will be evaluated to determine the appropriate level of intervention needed. Where the severity of deterioration requires repair or limited replacement of a distinctive feature, the new material will match the old in composition, design, color, and texture.
7. Chemical or physical treatments, if appropriate, will be undertaken using the gentlest means possible. Treatments that cause damage to historic materials will not be used.
8. Archeological resources will be protected and preserved in place. If such resources must be disturbed, mitigation measures will be undertaken.

Preservation as a treatment

When the property's distinctive materials, features, and spaces are essentially intact and thus convey the historic significance without extensive repair or replacement; when depiction at a particular period of time is not appropriate; and when a continuing or new use does not require additions or extensive alterations, Preservation may be considered as a treatment.

The **Guidelines for the Treatment of Historic Properties** illustrate the practical application of these treatment standards to historic properties. These Guidelines are also available in **PDF format**.

The **Guidelines for the Treatment of Cultural Landscapes** apply these treatment standards to historic cultural landscapes.

Technical Preservation Services

National Park Service
U.S. Department of the Interior

Restoration as a Treatment

Restoration is defined as the act or process of accurately depicting the form, features, and character of a property as it appeared at a particular period of time by means of the removal of features from other periods in its history and reconstruction of missing features from the restoration period. The limited and sensitive upgrading of mechanical, electrical, and plumbing systems and other code-required work to make properties functional is appropriate within a restoration project.

Standards for Restoration

1. A property will be used as it was historically or be given a new use which reflects the property's restoration period.
2. Materials and features from the restoration period will be retained and preserved. The removal of materials or alteration of features, spaces, and spatial relationships that characterize the period will not be undertaken.
3. Each property will be recognized as a physical record of its time, place, and use. Work needed to stabilize, consolidate and conserve materials and features from the restoration period will be physically and visually compatible, identifiable upon close inspection, and properly documented for future research.
4. Materials, features, spaces, and finishes that characterize other historical periods will be documented prior to their alteration or removal.
5. Distinctive materials, features, finishes, and construction techniques or examples of craftsmanship that characterize the restoration period will be preserved.
6. Deteriorated features from the restoration period will be repaired rather than replaced. Where the severity of deterioration requires replacement of a distinctive feature, the new feature will match the old in design, color, texture, and, where possible, materials.
7. Replacement of missing features from the restoration period will be substantiated by documentary and physical evidence. A false sense of history will not be created by adding conjectural features, features from other properties, or by combining features that never existed together historically.
8. Chemical or physical treatments, if appropriate, will be undertaken using the gentlest means possible. Treatments that cause damage to historic materials will not be used.
9. Archeological resources affected by a project will be protected and preserved in place. If such resources must be disturbed,

mitigation measures will be undertaken.

0. Designs that were never executed historically will not be constructed.

Restoration as a treatment

When the property's design, architectural, or historical significance during a particular period of time outweighs the potential loss of extant materials, features, spaces, and finishes that characterize other historical periods; when there is substantial physical and documentary evidence for the work; and when contemporary alterations and additions are not planned, Restoration may be considered as a treatment. Prior to undertaking work, a particular period of time, i.e., the restoration period, should be selected and justified, and a documentation plan for Restoration developed.

The **Guidelines for the Treatment of Historic Properties** illustrate the practical application of these treatment standards to historic properties. These Guidelines are also available in **PDF format**.

The **Guidelines for the Treatment of Cultural Landscapes** apply these treatment standards to historic cultural landscapes.

---

nps.gov

EXPERIENCE YOUR AMERICA™

Technical Preservation Services

National Park Service
U.S. Department of the Interior

Rehabilitation as a Treatment

Rehabilitation is defined as the act or process of making possible a compatible use for a property through repair, alterations, and additions while preserving those portions or features which convey its historical, cultural, or architectural values.

Standards for Rehabilitation

1. A property will be used as it was historically or be given a new use that requires minimal change to its distinctive materials, features, spaces, and spatial relationships.
2. The historic character of a property will be retained and preserved. The removal of distinctive materials or alteration of features, spaces, and spatial relationships that characterize a property will be avoided.
3. Each property will be recognized as a physical record of its time, place, and use. Changes that create a false sense of historical development, such as adding conjectural features or elements from other historic properties, will not be undertaken.
4. Changes to a property that have acquired historic significance in their own right will be retained and preserved.
5. Distinctive materials, features, finishes, and construction techniques or examples of craftsmanship that characterize a property will be preserved.
6. Deteriorated historic features will be repaired rather than replaced. Where the severity of deterioration requires replacement of a distinctive feature, the new feature will match the old in design, color, texture, and, where possible, materials. Replacement of missing features will be substantiated by documentary and physical evidence.
7. Chemical or physical treatments, if appropriate, will be undertaken using the gentlest means possible. Treatments that cause damage to historic materials will not be used.
8. Archeological resources will be protected and preserved in place. If such resources must be disturbed, mitigation measures will be undertaken.
9. New additions, exterior alterations, or related new construction will not destroy historic materials, features, and spatial relationships that characterize the property. The new work will be differentiated from the old and will be compatible with the historic materials, features, size, scale and proportion, and massing to protect the integrity of the property and its environment.
0. New additions and adjacent or related new construction will be undertaken in such a manner that, if removed in the future, the essential form and integrity of the historic property and its environment would be unimpaired.

Rehabilitation as a treatment

When repair and replacement of deteriorated features are necessary; when alterations or additions to the property are planned for a new or continued use; and when its depiction at a particular period of time is not appropriate, Rehabilitation may be considered as a treatment.

The **Guidelines for the Treatment of Historic Properties** illustrate the practical application of these treatment standards to historic properties. These Guidelines are also available in **PDF format**.

The **Guidelines for the Treatment of Cultural Landscapes** apply these treatment standards to historic cultural landscapes.

---

nps.gov

EXPERIENCE YOUR AMERICA™

Reconstruction

Reconstruction is defined as the act or process of depicting, by means of new construction, the form, features, and detailing of a non-surviving site, landscape, building, structure, or object for the purpose of replicating its appearance at a specific period of time and in its historic location.

Standards for Reconstruction

1. Reconstruction will be used to depict vanished or non-surviving portions of a property when documentary and physical evidence is available to permit accurate reconstruction with minimal conjecture, and such reconstruction is essential to the public understanding of the property.
2. Reconstruction of a landscape, building, structure, or object in its historic location will be preceded by a thorough archeological investigation to identify and evaluate those features and artifacts which are essential to an accurate reconstruction. If such resources must be disturbed, mitigation measures will be undertaken.
3. Reconstruction will include measures to preserve any remaining historic materials, features, and spatial relationships.
4. Reconstruction will be based on the accurate duplication of historic features and elements substantiated by documentary or physical evidence rather than on conjectural designs or the availability of different features from other historic properties. A reconstructed property will re-create the appearance of the non-surviving historic property in materials, design, color, and texture.
5. A reconstruction will be clearly identified as a contemporary re-creation.
6. Designs that were never executed historically will not be constructed.

Reconstruction

When a contemporary depiction is required to understand and interpret a property's historic value (including the re-creation of missing components in a historic district or site); when no other property with the same associative value has survived; and when sufficient historical documentation exists to ensure an accurate reproduction, Reconstruction may be considered as a treatment.

The **Guidelines for the Treatment of Historic Properties** illustrate the practical application of these treatment standards to historic properties. These Guidelines are also available in **PDF format**.

The **Guidelines for the Treatment of Cultural Landscapes** apply these treatment standards to historic cultural landscapes.

Preservation as a Treatment

Preservation is defined as the act or process of applying measures necessary to sustain the existing form, integrity, and materials of an historic property. Work, including preliminary measures to protect and stabilize the property, generally focuses upon the ongoing maintenance and repair of historic materials and features rather than extensive replacement and new construction. New exterior additions are not within the scope of this treatment; however, the limited and sensitive upgrading of mechanical, electrical, and plumbing systems and other code-required work to make properties functional is appropriate within a preservation project.

Standards for Preservation

1. A property will be used as it was historically, or be given a new use that maximizes the retention of distinctive materials, features, spaces, and spatial relationships. Where a treatment and use have not been identified, a property will be protected and, if necessary, stabilized until additional work may be undertaken.
2. The historic character of a property will be retained and preserved. The replacement of intact or repairable historic materials or alteration of features, spaces, and spatial relationships that characterize a property will be avoided.
3. Each property will be recognized as a physical record of its time, place, and use. Work needed to stabilize, consolidate, and conserve existing historic materials and features will be physically and visually compatible, identifiable upon close inspection, and properly documented for future research.
4. Changes to a property that have acquired historic significance in their own right will be retained and preserved.
5. Distinctive materials, features, finishes, and construction techniques or examples of craftsmanship that characterize a property will be preserved.
6. The existing condition of historic features will be evaluated to determine the appropriate level of intervention needed. Where the severity of deterioration requires repair or limited replacement of a distinctive feature, the new material will match the old in composition, design, color, and texture.
7. Chemical or physical treatments, if appropriate, will be undertaken using the gentlest means possible. Treatments that cause damage to historic materials will not be used.
8. Archeological resources will be protected and preserved in place. If such resources must be disturbed, mitigation measures will be undertaken.

Preservation as a treatment

When the property's distinctive materials, features, and spaces are essentially intact and thus convey the historic significance without extensive repair or replacement; when depiction at a particular period of time is not appropriate; and when a continuing or new use does not require additions or extensive alterations, Preservation may be considered as a treatment.

The **Guidelines for the Treatment of Historic Properties** illustrate the practical application of these treatment standards to historic properties. These Guidelines are also available in **PDF format**.

The **Guidelines for the Treatment of Cultural Landscapes** apply these treatment standards to historic cultural landscapes.

Technical Preservation Services

National Park Service
U.S. Department of the Interior

Home > The Standards > Four Approaches to the Treatment of Historic Properties > Restoration

Restoration as a Treatment

Restoration is defined as the act or process of accurately depicting the form, features, and character of a property as it appeared at a particular period of time by means of the removal of features from other periods in its history and reconstruction of missing features from the restoration period. The limited and sensitive upgrading of mechanical, electrical, and plumbing systems and other code-required work to make properties functional is appropriate within a restoration project.

Standards for Restoration

1. A property will be used as it was historically or be given a new use which reflects the property's restoration period.
2. Materials and features from the restoration period will be retained and preserved. The removal of materials or alteration of features, spaces, and spatial relationships that characterize the period will not be undertaken.
3. Each property will be recognized as a physical record of its time, place, and use. Work needed to stabilize, consolidate and conserve materials and features from the restoration period will be physically and visually compatible, identifiable upon close inspection, and properly documented for future research.
4. Materials, features, spaces, and finishes that characterize other historical periods will be documented prior to their alteration or removal.
5. Distinctive materials, features, finishes, and construction techniques or examples of craftsmanship that characterize the restoration period will be preserved.
6. Deteriorated features from the restoration period will be repaired rather than replaced. Where the severity of deterioration requires replacement of a distinctive feature, the new feature will match the old in design, color, texture, and, where possible, materials.
7. Replacement of missing features from the restoration period will be substantiated by documentary and physical evidence. A false sense of history will not be created by adding conjectural features, features from other properties, or by combining features that never existed together historically.
8. Chemical or physical treatments, if appropriate, will be undertaken using the gentlest means possible. Treatments that cause damage to historic materials will not be used.
9. Archeological resources affected by a project will be protected and preserved in place. If such resources must be disturbed,

mitigation measures will be undertaken.

0. Designs that were never executed historically will not be constructed.

Restoration as a treatment

When the property's design, architectural, or historical significance during a particular period of time outweighs the potential loss of extant materials, features, spaces, and finishes that characterize other historical periods; when there is substantial physical and documentary evidence for the work; and when contemporary alterations and additions are not planned, Restoration may be considered as a treatment. Prior to undertaking work, a particular period of time, i.e., the restoration period, should be selected and justified, and a documentation plan for Restoration developed.

The **Guidelines for the Treatment of Historic Properties** illustrate the practical application of these treatment standards to historic properties. These Guidelines are also available in **PDF format**.

The **Guidelines for the Treatment of Cultural Landscapes** apply these treatment standards to historic cultural landscapes.

---

nps.gov

EXPERIENCE YOUR AMERICA™

Technical Preservation Services

National Park Service
U.S. Department of the Interior

Rehabilitation as a Treatment

Rehabilitation is defined as the act or process of making possible a compatible use for a property through repair, alterations, and additions while preserving those portions or features which convey its historical, cultural, or architectural values.

Standards for Rehabilitation

1. A property will be used as it was historically or be given a new use that requires minimal change to its distinctive materials, features, spaces, and spatial relationships.
2. The historic character of a property will be retained and preserved. The removal of distinctive materials or alteration of features, spaces, and spatial relationships that characterize a property will be avoided.
3. Each property will be recognized as a physical record of its time, place, and use. Changes that create a false sense of historical development, such as adding conjectural features or elements from other historic properties, will not be undertaken.
4. Changes to a property that have acquired historic significance in their own right will be retained and preserved.
5. Distinctive materials, features, finishes, and construction techniques or examples of craftsmanship that characterize a property will be preserved.
6. Deteriorated historic features will be repaired rather than replaced. Where the severity of deterioration requires replacement of a distinctive feature, the new feature will match the old in design, color, texture, and, where possible, materials. Replacement of missing features will be substantiated by documentary and physical evidence.
7. Chemical or physical treatments, if appropriate, will be undertaken using the gentlest means possible. Treatments that cause damage to historic materials will not be used.
8. Archeological resources will be protected and preserved in place. If such resources must be disturbed, mitigation measures will be undertaken.
9. New additions, exterior alterations, or related new construction will not destroy historic materials, features, and spatial relationships that characterize the property. The new work will be differentiated from the old and will be compatible with the historic materials, features, size, scale and proportion, and massing to protect the integrity of the property and its environment.
0. New additions and adjacent or related new construction will be undertaken in such a manner that, if removed in the future, the essential form and integrity of the historic property and its environment would be unimpaired.

Rehabilitation as a treatment

When repair and replacement of deteriorated features are necessary; when alterations or additions to the property are planned for a new or continued use; and when its depiction at a particular period of time is not appropriate, Rehabilitation may be considered as a treatment.

The **Guidelines for the Treatment of Historic Properties** illustrate the practical application of these treatment standards to historic properties. These Guidelines are also available in **PDF format**.

The **Guidelines for the Treatment of Cultural Landscapes** apply these treatment standards to historic cultural landscapes.

---

nps.gov

EXPERIENCE YOUR AMERICA™

Reconstruction

Reconstruction is defined as the act or process of depicting, by means of new construction, the form, features, and detailing of a non-surviving site, landscape, building, structure, or object for the purpose of replicating its appearance at a specific period of time and in its historic location.

Standards for Reconstruction

1. Reconstruction will be used to depict vanished or non-surviving portions of a property when documentary and physical evidence is available to permit accurate reconstruction with minimal conjecture, and such reconstruction is essential to the public understanding of the property.
2. Reconstruction of a landscape, building, structure, or object in its historic location will be preceded by a thorough archeological investigation to identify and evaluate those features and artifacts which are essential to an accurate reconstruction. If such resources must be disturbed, mitigation measures will be undertaken.
3. Reconstruction will include measures to preserve any remaining historic materials, features, and spatial relationships.
4. Reconstruction will be based on the accurate duplication of historic features and elements substantiated by documentary or physical evidence rather than on conjectural designs or the availability of different features from other historic properties. A reconstructed property will re-create the appearance of the non-surviving historic property in materials, design, color, and texture.
5. A reconstruction will be clearly identified as a contemporary re-creation.
6. Designs that were never executed historically will not be constructed.

Reconstruction

When a contemporary depiction is required to understand and interpret a property's historic value (including the re-creation of missing components in a historic district or site); when no other property with the same associative value has survived; and when sufficient historical documentation exists to ensure an accurate reproduction, Reconstruction may be considered as a treatment.

The **Guidelines for the Treatment of Historic Properties** illustrate the practical application of these treatment standards to historic properties. These Guidelines are also available in **PDF format**.

The **Guidelines for the Treatment of Cultural Landscapes** apply these treatment standards to historic cultural landscapes.

APPENDIX G

NATIONAL REGISTER OF HISTORIC PLACES REGISTRATION FORM FOR “PIERS AND REVETMENTS AT GRAND HAVEN, MICHIGAN”

NPS Form 10-900
(Oct. 1990)

OMB No. 10024-0018

United States Department of the Interior
National Park Service

National Register of Historic Places Registration Form

This form is for use in nominating or requesting determinations for individual properties and districts. See instructions in *How to Complete the National Register of Historic Places Registration Form* (National Register Bulletin 16A). Complete each item by marking "x" in the appropriate box or by entering the information requested. If an item does not apply to the property being documented, enter "N/A" for "not applicable." For functions, architectural classification, materials, and areas of significance, enter only categories and subcategories from the instructions. Place additional entries and narrative items on continuation sheets (NPS Form 10-900a). Use a typewriter, word processor, or computer, to complete all items.

1. Name of Property

historic name Piers and Revetments at Grand Haven, Michigan

other names/site number

2. Location

street & number Mouth of Grand River ☐ not for publication

city or town Grand Haven ☐ vicinity

state Michigan code MI county Ottawa code 139 zip code 49417

3. State/Federal Agency Certification

As the designated authority under the National Historic preservation Act, as amended, I hereby certify that this ☐ nomination ☐ request for determination of eligibility meets the documentation standards for registering properties in the National Register of Historic Places and meets the procedural and professional requirements set forth in 36 CFR Part 60. In my opinion, the property ☐ meets ☐ does not meet the National Register criteria. I recommend that this property be considered significant ☐ nationally ☐ statewide ☐ locally. (☐ See continuation sheet for additional comments.)

Signature of certifying official/Title Date

State or Federal agency and bureau

In my opinion, the property ☐ meets ☐ does not meet the National Register criteria. (☐ See continuation sheet for additional comments.)

Signature of certifying official/Title Date

State or Federal agency and bureau

4. National Park Service Certification

I hereby certify that the property is:

Signature of the Keeper Date of Action

☐ entered in the National Register.
☐ See continuation sheet.
☐ determined eligible for the National Register
☐ See continuation sheet.
☐ determined not eligible for the National Register.
☐ removed from the National Register.
☐ other, (explain:)

Piers and Revetments at Grand Haven, Michigan
Name of Property

Ottawa, Michigan
County and State

5. Classification

Ownership of Property
(Check as many boxes as apply)

- ☐ private
- ☐ public-local
- ☐ public-State
- ☒ public-Federal

Category of Property
(Check only one box)

- ☐ building(s)
- ☐ district
- ☐ site
- ☒ structure
- ☐ object

Number of Resources within Property
(Do not include previously listed resources in the count.)

Contributing	Noncontributing	
		buildings
		sites
4	0	structures
		objects
4	0	Total

Name of related multiple property listing
(Enter "N/A" if property is not part of a multiple property listing.)

N/A

Number of contributing resources previously listed in the National Register

0

6. Function or Use

Historic Functions
(Enter categories from instructions)

TRANSPORTATION/water-related

Current Functions
(Enter categories from instructions)

TRANSPORTATION/water-related
RECREATION/outdoor recreation

7. Description

Architectural Classification
(Enter categories from instructions)

OTHER: No style

Materials
(Enter categories from instructions)

foundation wood piles, steel sheeting, stone
walls
roof
other wood, stone, steel sheeting, concrete,

Narrative Description
(Describe the historic and current condition of the property on one or more continuation sheets.)

The U.S. Army Corps of Engineers navigation structures, including two piers and two revetments, are located at the mouth of the Grand River in the harbor at Grand Haven, Ottawa County, Michigan. The piers and revetments protect the mouth of the Grand River; the northern pier extends 1,414 ft, and the southern 1,495 ft. The channel is 300 ft wide and 23 ft deep from Lake Michigan to a point 1,000 ft inside the pier ends. From that point to 0.5 mi upriver, to the Grand Trunk Railroad Bridge at Ferrysburg, the width of the channel remains at 300 ft, while the depth is reduced to 21 ft. The revetments guarding the margin of

(Continued)

Piers and Revetments at Grand Haven, Michigan
Name of Property

Ottawa, Michigan
County and State

8. Statement of Significance

Applicable National Register Criteria
(Mark "x" in one or more boxes for the criteria qualifying the property for National Register listing.)

- ☐ A Property is associated with events that have made a significant contribution to the broad patterns of our history.
- ☐ B Property is associated with the lives of persons significant in our past.
- ☒ C Property embodies the distinctive characteristics of a type, period, or method of construction or represents the work of a master, or possesses high artistic values,or represents a significant and distinguishable entity whose components lack individual distinction.
- ☐ D Property has yielded, or is likely to yield, information important in prehistory or history.

Criteria considerations
(Mark "x" in all the boxes that apply.)

Property is:

- ☐ A owned by a religious institution or used for religious purposes.
- ☐ B removed from its original location.
- ☐ C a birthplace or grave.
- ☐ D a cemetery.
- ☐ E a reconstructed building, object, or structure.
- ☐ F a commemorative property.
- ☐ G less than 50 years of age or achieved significance within the past 50 years.

Areas of Significance
(Enter categories from instructions)

Engineering

Period of Significance

ca. 1857-1935

Significant Dates

1857

1867

1916

Significant Person
(Complete if Criterion B is marked above)

Cultural Affiliation

Architect/Builder

Detroit and Milwaukee Railroad

U.S. Army Corps of Engineers

Narrative Statement of Significance
(Explain the significance of the property on one or more continuation sheets.)

9. Major Bibliographical References

Bibliography
(Cite the books, articles, and other sources used in preparing this form on one or more continuation sheets.)

Previous documentation on file (NPS):

- ☐ preliminary determination of individual listing (36 CFR 67) has been requested
- ☐ previously listed in the National Register
- ☐ previously determined eligible by the National Register
- ☐ designated a National Historic Landmark
- ☐ recorded by Historic American Buildings Survey # _____
- ☐ recorded by Historic American Engineering Record # _____

Primary location of additional data:

- ☐ State Historic Preservation Office
- ☐ Other State agency
- ☐ Federal agency
- ☐ Local government
- ☐ University
- ☐ Other

Name of repository:

U.S. COE Office-Grand Haven; U.S. COE Office-Detroit

Piers and Revetments at Grand Haven, Michigan
Name of Property

Ottawa, Michigan
County and State

10. Geographical Data

Acreage of Property 8.16 acres

UTM References
(Place additional UTM references on a continuation sheet.)

	Zone	Easting	Northing		Zone	Easting	Northing
1	16	701200	5152760	3			
2	16	700895	5153330	4			

☐ See continuation sheet

Verbal Boundary Description
(Describe the boundaries of the property on a continuation sheet.)

Boundary Justification
(Explain why the boundaries were selected on a continuation sheet.)

11. Form Prepared By

name/title C. Stephan Demeter/Historical Archaeologist and Historian; Kathryn C. Egan/Archaeologist

organization Commonwealth Cultural Resources Group, Inc. date October 6, 1993

street & number 2530 Spring Arbor Road telephone 517-788-3550

city or town Jackson state Michigan zip code 49203-3602

Additional Documentation

Submit the following items with the completed form:

Continuation Sheets

Maps

A USGS map (7.5 or 15 minute series) indicating the property's location.

A Sketch map for historic districts and properties having large acreage or numerous resources.

Photographs

Representative black and white photographs of the property.

Additional items
(Check with the SHPO or FPO for additional items)

Property Owner

(Complete this item at the request of SHPO or FPO.)

name

street & number telephone

city or town state zip code

Paperwork Reduction Act Statement: This information is being collected for application to the National Register of Historic Places to nominate properties for listing or determine eligibility for listing, to list properties, and to amend existing listings. Response to this request is required to obtain a benefit in accordance with the National Historic Preservation Act, as amended (16 U.S.C. 470 *et seq.*).

Estimated Burden Statement: Public reporting burden for this form is estimated to average 18.1 hours per response including time for reviewing instructions, gathering and maintaining data, and completing and reviewing the form. Direct comments regarding this burden estimate or any aspect of this form to the Chief, Administrative Services Division, National Park Service, P.O. Box 37127, Washington, DC 20013-7127; and the Office of Management and Budget, Paperwork Reductions Projects (1024-0018), Washington, DC 20503.

Narrative Description

the ship channel at this point extend for 2,159 ft along the north bank and for 3,674 ft along the south bank. An 18 ft deep turning basin lies just below the south side of the bridge. Upriver from the turning basin to Spring Lake (3,100 ft), the channel narrows to a width of 100 ft and is dredged to a depth of 18 ft (Figure 1). From Spring Lake for a distance of 14.5 mi the channel is 100 ft wide and 8 ft deep.

The U.S. Army Corps of Engineers (COE) owned piers and revetments possess composite substructures consisting of stone filled timber cribs, close driven round timber piles and wood plank sheet piles reflective of upwards of 19 construction episodes carried out over the 62-year period between 1857 and 1919. Virtually the entire substructure is presently covered with a steel sheet pile facade set in place between 1951 and 1983 (Figures 1 through 5). The exceptions to this include a 1,164 ft segment (Section P) of the south revetment and two segments (Sections D and G) of the north revetment totaling 556 ft in which the original wood pilings respectively dating to 1872-75/1910-11, 1873-74, and 1918 construction phases remain evident (Figures 1, 3, and 5). These elements are, however, largely obscured by the slab concrete superstructure built along the piers and revetments between 1916 and 1938. This superstructure element has generally been adapted to the post-1950 reconstructure episodes conducted along the piers and revetments.

A schedule of the various construction-reconstruction episodes for the COE-owned Grand Haven piers and revetments can be presented as follows:

Construction Schedules

Structure	Section	Length (ft)	Substructure	Superstructure	Repaired
North Pier	A-1	55	1894	1921	1953
	A	648	1887, 1889, 1891, 1894	1921	1953-55
	A-2	106	1894	1921	1952
	B	605	1875, 1877-79	1922	1957-58
		1,414 (Total)			
North Revetment	C	9	1873-74, 1932	1932	1957
	C-1	191	1873-74, 1932	1932	1957, 1983
	D	406	1873-74	1932	---
	E	677	1873-74, 1911	1938	1981
	F	726	1917-18	1917-18	1931-32, 1963
	G	150	1918	1918	---
		2,159 (Total)			

Construction Schedules (cont.)

Structure	Section	Length (ft)	Substructure	Superstructure	Repaired
South Pier	H	119	1893-94	1921-22	1957
	H-1	632	1883-85, 1887, 1891-93	1921-22	1954
	I	348	1882-84	1919-20	1951-52, 1957
	J	78	1868-69, 1919-20	1919-20	1957, 1959-60
	J-1	31	1868-69, 1919-20	1919-20	1957, 1959-60
	K	287	1867-68, 1916-67	1916-67	1959-60
		1,495 (Total)			
South Revetment	L	315	1857-58, 1884, 1908-09	1935	1972
	M/M-1	452	1857-58, 1910-1	1935	1972
	N	353	1857-58, 1916-18	1916-18	1963
	O	324	1857-58, 1916-18	1916-18	1963
	P	1,164	1872-75, 1910-11	1936-37	---
	Q	26	1910-11	1933	1972
	R-1	73	1910-11	1933-34	1972
	R-2/R-3	260	1857-58, 1910-11	1935	1972
	R-4/R-5	394	1857-58, 1910-11	1935	1972
	S	477	1910-11	1930	1962
	T	136	1910-11, 1914	1930	1962
		3,674 (Total)			

(U.S.A.E.D.D. 1993)

Narrative Statement of Significance

Engineering Significance (Criterion C)

Technological Overview (General)

The opening of the upper Great Lakes region to a more intensified range of settlement had, by the early 1850s, led to accelerated commercial growth. In addition to increases in the mainstays of agricultural production and logging, this period also witnessed the emergence of the extractive mineral industries of Lake Superior and the development of urban consumer-production centers along the south shores of Lakes Erie and Michigan. The opening of the St. Mary's Ship Canal and the modification of the Welland Canal were important manifestations of this early phase of regional development. Whereas the former project provided direct access to the mining district of Lake Superior, the latter established a direct shipping link between the Great Lakes ports with those along the Atlantic seaboard and Europe (Strickland 1860:340). As an adjunct to the increasingly important role of ship navigation in regional economic growth, harbor construction took on a new significance. While federal involvement in port development projects on the upper Great Lakes had begun as early as the mid-1830s at St. Joseph on Lake Michigan, and at Monroe on Lake Erie, it was not until the early 1850s that these efforts were extended beyond simple channel clearing operations and began to manifest themselves in construction projects aimed at creating refuges along an otherwise largely unprotected coastline (Larson 1981:24).

An integral element of harbor construction activities on the Great Lakes was the creation of pier and breakwater barriers serving as shelter for shipping and the protection of dock and wharf facilities that might otherwise be directly exposed to wave and ice damage. Because of the occurrence of numerous protected harbors along the Atlantic coast the need for breakwater construction, and the prerequisite technology, had been of minimal importance to harbor engineering in the United States up through the early nineteenth century (Strickland 1826). It was not until the needs of a greatly expanded Great Lakes shipping trade began to require extensive harbor improvement projects that direct experience in this field was initiated. According to one turn-of-the-century source, it was directly due to this situation that "...the design and construction of breakwaters... [had]...reached a high [stage of] development" in the United States (Wright 1914:699). The largest proportion of this work was the product of federally legislated United States Army Corps of Engineers activities.

Breakwater design on the Great Lakes since the mid-nineteenth century has depended on a variety of compositional elements, ranging from the use of timber cribbing, wood sheet and timber pilings, concrete, driven steel sheeting, and stone rubble. Variations in design fabrication have been numerous over the past 150 years. While these transitions can ultimately be traced to technological innovations ongoing in the construction trade during this period, other important factors relate directly to per unit costs, the local availability of supplies, function, and environmental stress factors.

The fact that jetties and breakwaters are virtually identical in terms of composition and design, and are nominally categorized under the general heading of pier structures, has tended to create a certain amount of confusion in structure identifications (Wright 1914:699). As defined in the field of marine engineering, jetties and breakwaters are distinguished, in part, according to their placement in relation to the shore (Wright 1914:699). A far more important element serving to segregate the two structural types is associated with their intended functions. These are categorized as follows:

Breakwater

A breakwater is a structure employed to reflect and/or dissipate the energy of water waves and thus prevent or reduce wave action in an area it is desired to protect. Breakwaters for navigation purposes are constructed to create sufficiently calm waters in a harbor area, thereby providing protection for the safe mooring, operating, and handling of ships and protection of shipping facilities. Breakwaters are sometimes constructed within large, established harbors to protect shipping and small craft in an area that would be exposed to excessive wave action. Offshore breakwaters may serve as aids to navigation and/or shore protection, and differ from other breakwaters in that they are generally parallel to and not connected with the shore.

Jetty

A jetty is a structure, generally built perpendicular to the shore, extending into a body of water to direct and confine a stream or tidal flow to a selected channel and to prevent or reduce shoaling of that channel. Jetties at the entrance to a bay or a river also serve to protect the entrance channel from storm waves and crosscurrents, and when located at inlets through barrier beaches jetties also serve to stabilize the inlet location [United States Department of the Army (U.S.D.A.) 1986:1-3].

Within the Great lakes the usage of the term "jetty" has traditionally been dropped in favor of the more generic designation of "pier" when referring to protective structures at channel mouths. While this may actually reflect a variable in design function, the origin of this usage can likely be traced back to the terminology employed in the enabling legislation authorizing the various federal harbor improvement projects in the region.

During the past century, numerous innovations have been adopted in pier (i.e., breakwater/jetty) construction on the Great Lakes. To a large extent, these transitions have reflected a delicate balance between factors of need and cost. One example representative of this approach can be seen in the relatively low occurrence of the stone rubble moles, almost universally adapted in Europe and the Mediterrian for breakwater construction since the Classical period. Prior to 1940, its use in the upper Great Lakes, above Lake Erie, was limited to no more than 7,082 ft of free-standing structure, of which more than half (3,949 ft) had been erected between 1910 and 1913; at Ashland and Marquette harbors on Lake Superior; and Mackinac Island Harbor at the north end of Lake Huron (United States Army Engineer District, Detroit [U.S.A.E.D.D] 1986). The use of stone as ballast in timber crib breakwater construction was common throughout the nineteenth century. At soft-bottom harbor sites, it was also deposited as a barrier along the base of the breakwater to prevent scouring or undercutting of the substructure. At locations possessing hard clay or rock bottoms, stone was often employed as a foundation material for timber crib piers which as a result could be extended further into deeper waters than would normally have been possible with the use of crib-work alone. In addition to the above uses, stone was also employed as a shock absorbing sloped barrier on the lakeward side of the breakwaters (Figure 6). In some instances, stone rubble has been laid up along the harbor facing walls or carried up over the top of the original substructure (Figure 7). This approach to breakwater construction reflects one of several employed since the 1910s in rehabilitation projects aimed at stabilizing and improving the earlier dating timber crib or pile substructures. These efforts have led to the creation of composite structures exhibiting the profile of a rubble mound but possessing diverse core elements indicative of prior building phases.

In addition to stone and concrete rubble mounds, the use of interlocking steel sheet piling has widely been employed since its apparent initial use as part of the north breakwater at Port Washington Harbor in 1934 (U.S.A.E.D.D. 1986).

This material has been employed both in new construction projects and in the rehabilitation of existing pier substructures. In the latter instance, the "replaced" structure forms the core element of the new structure. Since the late 1940s, the use of steel sheet pile cells, ovate to circular in horizontal cross section, has also been employed in breakwater/jetty construction. These units are customarily filled with combinations of stone, sand, or dredged spoil.

The use of cast-iron sheet piling was first employed during the construction of the Liverpool Dock in 1825. Its use in the United States did not occur for another two decades, when it was employed during the construction of the lighthouse at Brandywine Shoal on Delaware Bay (Kirby and Laurson 1932:258). Its use in the Great Lakes was minimal until the post-World War II period.

In general, the use of wood in harbor construction activities on the Atlantic seacoast of North America was pervasive up through the beginning of the niueteenth-century (Norman 1987). These early works took the form of timber cribs or consisted of vertically driven round timber piles with horizontal planking nailed along the inner side of the piles (Norman 1987:13). Both structure types were generally filled with either rock or soils derived from a variety of sources. Early nineteenth-century pier and bulkhead expansions along the Detroit waterfront indicate an ongoing use of such facilities as a disposal site for community wastes (Demeter and Weir 1987).

The use of driven round timber pile bulkhead supports had become fairly common in New York City wharf construction by the late 1830s (Hunt 1840:313; Norman 1987:21). Its use in wharf and jetty construction was a common feature of port development on the Great Lakes by the close of the following decade (Farmer 1890:816). In addition to stone and earthen fills, the use of wood scrap sawmill wastes was also a unique feature of regional construction techniques. As late as 1906, this approach was employed during the construction of 555 ft of the west pier of Port Wing Harbor (Lake Superior). While the use of such structures in breakwater development was minimal, one attempt utilizing this material was made in setting up 7,363 ft of substructure at Ashland Harbor (Lake Superior) between 1889 and 1894 (Figure 8). The end result was less than desired, leading to the capping of the entire structure, between 1908 and 1910, with an improvised dredge spoil and stone rubble mound (Figure 7).

Out of a total of 80 harbor projects presently under the jurisdiction of the U.S. Army Corps of Engineers, Detroit District, 37 (46.3 percent) exhibit breakwater/jetty elements consisting of timber cribbing. With few exceptions, the bulk of these are now encased as core elements within modified substructures. The timber crib substructure represents the dominant pier form employed throughout the Great Lakes during the nineteenth century. Their continued use into the present century can be documented at 17 locations within the Detroit District; the last of these being associated with the development of the south breakwater at Manistee (Lake Michigan) between 1913 and 1920 (U.S.A.C.E. 1916; U.S.A.E.D.D. 1986). The timber crib was referred to as the simplest substructure employed in breakwater/jetty construction which, by the opening of the twentieth century, was reported to be used "only in minor harbors or under primitive conditions" (Wright 1914:700). The crib substructure was constructed on-shore of hewn logs, floated into position and sunk in place with the addition of stone. The interior of the crib was divided into compartments formed by transverse and longitudinal timber walls with some of the compartments being floored with wood planking in order to receive the stone ballast at the time of sinking. The remaining compartments were subsequently filled to provide additional stability with the individual units being fixed in place with bar and strap iron. The above-water superstructure was next completed with a continuation of timbers or planking, or a combination of both. Unlike the substructure which normally consisted of pine or hemlock (Gary Frankish, personal communication 1993), oak represented the preferred material for the superstructure element and for guard fenders along the structure (U.S.A.C.E. 1883:1706; 1889:2172, 2193). These works normally extended from 5 ft to 10 ft above water level and generally featured a sloping face to the lakeward side designed to deflect the impact of wave forces. The degree of slope, as well as the overall superstructure design of the different works, tended to vary dependent on anticipated wave stresses, the availability of materials, and, to some extent, project specific experimentation. One innovative approach designed for the breakwater at Frankfort Harbor (Lake Michigan) in 1882 called for

the construction of a centrally positioned, longitudinally raised element consisting of 12 in × 12 in timbers (Figure 9). A more substantial design was adapted to the superstructure of the east breakwater built in Cleveland in 1887. The superstructure element of this pier was described as having been:

> ...carried up vertically for only 2 ft above water level and was then inclined at an angle of 1 on 2.5 until it attained a height of 10 ft above the water surface on the lake side. From that point it was horizontal until it met the harbor face which was vertical (Wright 1914:700).

This configuration was later modified during the construction of the breakwater at Presque Isle in 1897 in order to accommodate the heavier seas produced on Lake Superior. In this instance, a sloping deck of 6 in × 12 in plank was constructed on the timber superstructure set at 0.5 ft above the low-water datum ou the lakeward (parapet) side and extending to 10 ft high on the inner (banquette) harbor facing side. Lacking the flat top of the Cleveland breakwater, the Presque Isle superstructure was designed to allow "...the waves to slide over the work and fall down vertically inside, with a minimum of impact and resistance" (U.S.A.C.E. 1897:2638) (Figure 10).

Vertical iron strapping was added to the lakeward facing side of both the Cleveland and Presque Isle structures in order to anchor the superstructure to the substructure.

The use of a composite breakwater was first attempted in 1882 at Oswego, New York (Lake Ontario). In this instance, a concrete mortared cut stone deck was added as the superstructure to a timber crib substructure. This procedure was quickly abandoned when it became apparent that the flexible crib provided an extremely poor foundation to this variety of masonry work. By the close of the century the substitution of wood and cut stone with massed concrete as the primary constituent of superstructure construction was introduced at Buffalo and Cleveland harbors on Lake Erie.

The use of timber crib substructures in breakwater/jetty construction on the Great Lakes had been adopted in part due to its traditional usage in pier construction and the ready availability of timber and plank; however, crib piers were easily damaged in collision, and suffered from sand and ice erosion. Wave action similarly affected these structures both as a result of direct impact forces against the crib substructures, which often led to structural displacement, and the movement of the fill stone within the crib works. The wedgelike action of smaller stones similarly tended to place additional stress on the timber frame of the crib, either abrading the walls or separating its timber components. Weathering at the water line between high and low lake level horizons also represented a significant problem. By the turn of the twentieth century, it was postulated that timber crib breakwaters had an "average life...[of]... about 15 years" (Wright 1914:700). In effect, they were not designed as permanent structures, but only as stop-gap elements employed to meet the immediate needs of harbors or refuges whose long-term requirements were indeterminant. In all probability, the boomtown atmosphere that necessitated harbor development around lumber and ore shipping centers was viewed as a short-term need likely to evaporate as production in these extractive industries decreased.

In order to reduce maintenance requirements on crib structures, certain procedures had been employed by the U.S. Army Corps of Engineers as public pier facilities began to fall under their jurisdiction during the mid-nineteenth century. Many of the crib structures completed by individuals and municipalities prior to this period had been set in place without adequate foundation preparation. These were, in some instances, anchored in place with the use of riprap mounded along the lakeward and (often) harbor facing walls. By the 1880s, crib components associated with soft-bottom harbor locations were consistently placed on driven round timber pilings with riprap laid along the base to prevent scouring. By the 1890s, those associated with hard-bottom locations were generally fixed on a foundation of small core stone with the upper elements of the substructure being secured with sloped riprap.

In addition to transitions in foundation and superstructure design implemented during the last quarter of the nineteenth and first quarter of the twentieth centuries, the crib substructures were themselves subject to certain modifications. This feature of breakwater/jetty design was most pronounced with regard to crib size. While widths tended to range anywhere from about 20 ft to 35 ft, lengths were fairly standardized. During the third quarter of the nineteenth century, the use of a 32 ft length seems to have been most common (U.S.A.C.E. 1867:153; 1876:469; Wright 1914:700). In the 1880s, crib length was increased to a more or less standardized 50 ft setting (U.S.A.C.E. 1883:1704; 1889:2171). By the 1910s, during the terminal phase of timber crib construction usage, the standard length had increased to 100 ft (U.S.A.C.E. 1916:3032).

The use of concrete as a protective element added to timber crib and stone rubble piers was initially employed during the reconstruction of the mole at Cherbourg completed in 1850 (Hamilton 1958:466). Between 1870 and 1872, a stone rubble breakwater extending for 9,675 ft was constructed at Alexandria, Egypt. This structure ranged up to a maximum of 60 ft in depth, on which a layer of armor stone was placed along the seaward side consisting of 20-ton concrete blocks (Vernon-Harcourt 1891:194). Both projects featured the use of concrete as a superstructure element. In the Cherbourg example, the cement composition utilized was described as "hydraulic lime" capable of hardening below water, while that associated with the construction of the Alexandria breakwater consisted of Portland cement blocks molded on shore and either barged or craned into place.

The shallow water breakwater constructed at Aberdeen Harbor employed both cement varieties. Begun in 1871, the base of this structure consisted of unmixed hydraulic lime placed in sack cloth bags ranging from 50 tons to 100 tons, which were barged into place and sunk to form the foundation. These were laid to within 2 ft above the low water datum and conformed to the uneven harbor bottom prior to setting (Vernon-Harcourt 1891:202-203; Wright 1914:702). The superstructure consisted of a megalithic concrete wall composed of Portland cement deposited in mass within a timber framed mold. The resultant wall measured approximately 23 ft in height and 42 ft at the base, constricting to 30 ft in width at the top. It was surmounted by a 6 ft parapet wall facing to the seaward side (Figure 11).

These advances in the use of concrete composition walls had a rapid impact on engineering standards practiced in the United States. One factor of prime importance in establishing this trend was the securing of a patent for the production of an artificial Portland cement in the United States by David O. Saylor in 1871. Saylor's cement was later specified by the federal government for use in the construction of the South Pass jetties at the Mississippi Delta. Built between 1875 and 1879, the east jetty of this project extended for 1 mi in length with the west jetty running for 0.5 mi in distance. Both were composed of megalithic concrete blocks, the largest of which weighed 260 tons, measuring 5 ft × 13 ft × 55 ft (Condit 1960:228).

The growth of the cement industry in the United States during the succeeding decade took advantage of a discovery made in about 1875 that utilized slaked blast furnace slag in the manufacture of an "adulterated" variety of Portland cement (Burchard 1914:759; Condit 1960:227; Thorpe 1898:483-485). Its use, in combination with slaked lime, was also widely employed in the manufacture of artificial puzzolanic cements employed in underwater work (Burchard 1914:760). When correctly ground as a sharp particle aggregate, slags were also utilized as a substitute for quartz sands in concrete production (Baker 1894:79). This material typically consisted of 6 to 8 parts of slag aggregate to 1 part of cement (Condit 1960:227-228). The increased importance of concrete as a construction material in North America can be seen to correlate with increases in iron ore production. During the 16-year period between 1856 and 1872, the cumulative production of iron ore from the Lake Superior region was estimated at 5,567,373 tons (Tuttle 1873:575). This figure represents slightly less than 17 percent of the total iron ore tonnage that passed through the Soo Locks alone in 1905, amounting to 34,353,456 tons (Dunbar 1965:503).

The adaptation of concrete in pier construction in the Great Lakes remained limited until the closing decade of the nineteenth century, when it began to emerge as a preferred material in superstructure construction and rehabilitation activities

associated with timber crib breakwaters and jetties. Among the earlier of the projects of this type carried out by the U.S. Army Corps of Engineers on the Great Lakes was the reconstruction of the "old breakwater" superstructure in Buffalo Harbor built in 1887/89 (Baker 1894:543; U.S. Army Engineer District, Buffalo [U.S.A.E.D.B.] 1989) (Figure 12). The composition employed in this instance was described as a "natural cement concrete," a low temperature calcinated limestone generally referred to as Roman cement (Burchard 1914:759).

The general configuration of the Buffalo breakwater superstructure was subsequently adopted in the rehabilitation (1898) of the West Breakwater superstructure in Cleveland Harbor (Wright 1914:701; U.S.A.E.D.B. 1989). In this instance, the timber crib substructure was removed to a point approximately 3 ft below mean water level and capped by three parallel lines of precast Portland cement concrete blocks, each measuring 4 ft × 4 ft × 8 ft. The open spacing between the blocks was filled with stone and the entire structure capped with a 5 ft thick banquette deck surmounted on the lake facing side by a sloped 5 ft high concrete parapet (Figure 13).

Within the present boundaries of the Detroit District Corps office, the superstructure of the Marquette Harbor breakwater represents a significant innovation in the use of mass concrete construction design. Rather than employing a raised outer parapet on the lake facing side, this portion of the superstructure exhibits an offset bileveled sloping face designed to break up the heavier wave forces produced on Lake Superior. Built between 1896 and 1905 on a timber crib substructure, this work entailed the placement of two parallel coarses of precast concrete sill blocks (rectangular in cross section) positioned atop the outer and inner crib walls with the space between being filled with stone. This was surmounted by a mass concrete deck structure standing a maximum of 8.4 ft above the foundation blocks on the harbor side. In addition to the offset lakeward slope face, this superstructure also featured an enclosed gallery walkway within the harbor side of the structure (Figure 6).

The conversion from wood plank and timber to concrete pier superstructures remained an ongoing feature of breakwater and jetty reconstruction projects for the next half century. During this same period, another innovation took place in the substitution of smooth surfaced concrete sill blocks (Figure 13) with recessed surface blocks designed to reduce the potential of shifting that might result from storm action, collision or decomposition of the timber substructure. This was initially introduced during the reconstruction of the main breakwater at Harbor Beach, on Lake Huron, in 1905 (Wright 1914:702; U.S.A.E.D.D. 1986) (Figure 14). Another development that occurred during this period was the introduction of the reinforced concrete caisson as a substitute for the timber crib substructure. Having first been introduced during the construction of the Algoma breakwater (Lake Superior) in 1908, these caissons measured 24 ft × 20 ft × 18 ft with 10 in thick vertical walls and a 14 in thick floor (U.S.A.C.E. 1908:1954). These were manufactured on-shore and floated to the construction site where they were sunk along the alignment of the proposed breakwater/jetty locations that had been prepared with wood piles. The caissons were next filled with stone riprap and capped with a concrete deck. This structure type was initially reinforced with 6 in × 6 in horizontal timbers and 12 in × 12 in vertical support posts along the interior walls. This element was further secured by the placement of transverse and longitudinal walls composed of 6 in × 6 in timbers that served to subdivide the structure into four compartments (Figure 15). The arrangement was similar to that of the timber crib which the concrete caisson was designed to replace. This usage presumably also lent itself to the adoption of the erroneous designation for the concrete caisson as being a "concrete crib" (Wright 1914:703).

As with the timber crib, the vertical wall configuration of the original concrete caisson design accepted the full impact of wave forces that invariably led to a certain amount of shafting of the substructure. This was compensated for by the use of riprap stone mounded along both the lakeward and harbor facing sides of substructure (U.S.A.E.D.D. 1986). The rectangular cross-sectioned concrete caisson was last employed during the construction of the Sheboygan Harbor breakwater (Lake Michigan) in 1913-15. During the construction of the south breakwater (Lake Michigan) extension at Racine Harbor (Lake

Michigan) in 1917-19, a sloped wall concrete caisson design was introduced. These had the advantage of not only deflecting the force of wave impacts, but also required lesser volumes of stone fill within the caisson module. This latter feature, combined with the utilization of sand as an alternative ballast fill served to reduce the material cost of construction.

The use of concrete caissons in breakwater/jetty construction on the Great Lakes was limited to Lake Michigan within the boundaries of the defunct Milwaukee District office; since absorbed by the Detroit District. Out of a total of 80 harbor projects presently under the jurisdiction of the Detroit District, only 9 (11.25 percent) exhibit the usage of concrete caissons in breakwater/jetty construction. The latest of these occurred in conjunction with a 540 ft extension of the north breakwater at Kewaunee Harbor in 1936-37 (U.S.A.E.D.D. 1986).

Historic Overview (Site Specific)

Euroamerican settlement at Grand Haven was initiated with the establishment of the American Fur Company headquarters at this location in 1827. With the disbanding of this operation several years later, in the face of intensified immigration to the Michigan Territory, the former company agents Rix Robinson and John Stuart acquired title to the property under the name of the Grand Haven Company in 1834. During the next two years the settlement grew to "upwards of 400 inhabitants", boasting "three steam sawmills... ...six spacious warehouses" and a regular trade in passengers and timber established by lake vessel with Chicago (Blois 1839:291; Fuller 1916:438). Several years later, in 1838, the Federal government constructed a lighthouse on the south lakefront side of the Grand River and in 1844 surveyed the channel mouth and lake bottom leading to the upriver port facility (Lillie 1980:203; Linebaugh 1984:2). A pier was later built to the lighthouse to arrest lake erosion. Damaged as a result of storm action this structure was subsequently abandoned with a new facility being completed on a more elevated ground location in 1855 (Linebaugh 1984:3).

In the 1840s, the number of sawmills at Grand Haven had increased to six with a capacity of 60,000 ft of lumber per day (Lillie 1980:232). The lumbering industry in Ottawa County gained its greatest momentum beginning in the 1850s. From 1850 to 1860, the number of sawmills in Grand Haven increased to 10, with a total capacity of more than four times that of the mills operating the previous decade. Lumber was to play a leading role in the development of Grand Haven for years to come (Lillie 1980:195-196, 301; Rubenstein and Ziewace 1981). The 1860s represented another boom period for Grand Haven's lumber industry. By 1862, two million board feet were being shipped weekly from Grand Haven. The city's most important mills at that time were E. L. Fuller & Company, Cutler & Savridge Lumber Company, Dennison, John Haire, F. T. Ranney, Becker, Spoon & Thompson, and Ferry & Sons (Lillie 1980:302, 305). By 1867, the mills were beginning to find it increasingly difficult to meet the demands for their product. Although pine was becoming scarce by this era, a market for hardwoods had opened with maple, oak, and elm being in high demand (Lillie 1980:317).

It was at the time of the reconstruction of the lighthouse that a significant shift in Grand Haven's potential as a port facility took place. This began with the consolidation of two competing railroad lines, the Oakland and Ottawa Railroad and the Detroit and Pontiac Railroad, under the name of the Detroit and Milwaukee Railroad in February 1855. By its very name this new corporation aimed at developing a direct railroad route between Detroit and the fast growing commercial center on Wisconsin's Lake Michigan shore. Rather than circumventing the lake with a bypass through Chicago, the railroad proposed to develop a more direct route employing a car ferry service between Grand Haven and Milwaukee. This move was accomplished during the next three years with the first through train with passengers from Milwaukee arriving in Detroit in September 1858 (Farmer 1890:894). Although a plan for the port at Grand Haven had been developed by Col. J. D. Graham of the U.S. Topographical Service in 1857, it was to be almost another decade before the U.S. Army Corps of Engineers (COE) became directly involved in harbor construction and maintenance activities (U.S. Army Corps of Engineers [U.S.A.C.E.] 1867:99). While the COE annual report for 1867 notes that Grand Haven represented "...a lumber market of some importance", the primary reason

for COE involvement rested on Grand Haven's importance as "...being one terminus of the Detroit and Milwaukee Railroad, and on an extensive line of communication between east and west" (U.S.A.C.E. 1867:109). A later COE report also noted that in addition to its importance in relation to railroad/lake commerce Grand Haven also held "...a special status as a harbor of refuge..." (U.S.A.C.E. 1890:2646).

Through the River and Harbor Act of June 23, 1866, the COE was authorized to implement Col. Graham's earlier recommendations which called for the protection of a concave bend along the south bank of the Grand River with close piling and the construction of two parallel piers at the mouth of the river extending into Lake Michigan (U.S.A.C.E. 1867:99). By this time, however, the Detroit & Milwaukee Railroad Company had already built a 3,185 ft long pier on the southern side of the harbor entrance. This was a pile and slab pier set at an angle of 11° more to the west than the direction originally recommended by Col. Graham. The orientation of the pier and mode of construction were faulty. Numerous piles had been washed out by the current, allowing sand to wash into the channel. Therefore, an alternative design, to that proposed by Col. Graham, was implemented. This plan called for filling the unprotected gap between the wharves and existing pier, and for extending the pier with timber cribs for 600 ft in a line with the existing alignment. In addition, the plan proposed that the north pier begin about 50 ft south of the location designated by Col. Graham and run in a line parallel to his until it was opposite the angle of the south pier, at which point the orientation should be shifted to parallel the south pier and extend until they were of equal length (U.S.A.C.E. 1867:101).

Prior to the commencement of the proposed work, repairs were completed on the south pier. Three hundred and nine feet of the pier had been burned by a fire, started by sparks from the steamboat *Detroit*. The COE had initiated repairs to the pier because the damage increased the likelihood of a breach that would interfere with the channel. The repairs were completed in 1867, and entailed cutting down the piles to water level, driving them in further, and placing timber cribbing atop the piles, filling them with wood slabs and stone (U.S.A.C.E. 1867:100).

Throughout the 1870s, funds were appropriated by the U.S. Government for further improvements to the port (U.S.A.C.E. 1873:38, 1876:101-102; Lillie 1980:329, 324). These improvements included: repairs to the piers; construction of 700 ft of pile revetment, replacing the old railroad work; strengthening the pierhead; and dredging the shoals that had filled in the channel. In addition, construction on the north pier was initiated and plans were established to construct a revetment along the bend in the river (Figures 2-5) (U.S.A.C.E. 1873:38, 1876:101-102). By 1880, the USACE work had resulted in the establishment of a 400 ft wide channel with a depth varying between 9 ft and 23 ft (U.S.A.C.E. 1880:217).

The Corps of Engineers continued to maintain and improve the harbor structures at Grand Haven through the 1880s. Harbor improvements included extending the dock from the foot of Clinton Street to the south pier and enclosing what was known as "Government Pond," thus narrowing the river channel (Lillie 1980:357-358).

Construction efforts during the 1880s were focused primarily on the piers. Both piers were expanded to afford greater protection to the harbor and reduce the shoaling of sand into the channel from the current. These extensions were of timber crib construction built on a pile foundations (Figures 4 and 5). The revetments were also repaired and refurbished (Figure 2). This work involved both relatively minor repairs and refilling and rebuilding of small segments of the superstructure (U.S.A.C.E. 1890:2647). In 1879, shoaling in the channel had reduced traffic and resulted in the wreck of three vessels (U.S.A.C.E. 1880:2020). During the 1880s, in an effort to further deter the encroachment of dune sand into the channel was also attempted. Fences were built along the shoreline (U.S.A.C.E. 1890:2647; Lillie 1980:354). Thousands of trees and other beach plants were planted along the shoreline to further stabilize the coast (U.S.A.C.E. 1880:2020; 1890:2647)).

In 1890, the piers were set 400 ft apart. The north pier projected about 1,120 ft beyond the shoreline with the south pier extending approximately 1,300 ft into the lake. The channel between the piers and into the river ranged between 18 ft and 24 ft in depth (U.S.A.C.E. 1890:2649). Despite the improvements to the harbor, there were serious problems with bars developing beyond the piers that reduced the width of the channel at the entrance to the harbor. Given these difficulties and the importance of maintaining the port, recommendations were made to extend the piers (the north pier 600 ft and the south pier 550 ft), to extend and repair the revetments inside the harbor entrance, and to adopt measures that would arrest the inflow of sands from the shore, riverbank, and the dunes (U.S.A.C.E. 1890:2647) (Figure 16). The proposed construction of the piers to their full extent was completed in the 1890s (Figures 4 and 5).

To further improve the safety of the harbor for shipping and navigation, a light was added on the south pier in 1881 shedding a beacon that was visible for 8 mi to 10 mi (Figure 16). This was a considerable improvement over the private light that was erected on a cross pole, on the north pier, and was only visible for 2 mi to 3 mi (Lillie 1980:363).

Shipping records from the late nineteenth and early twentieth centuries reflect the growing importance of this port as a transportation and commercial center. During the year of 1866, there were 8,000 vessel entries and departures carrying a total of 18,000 tons of cargo in and out of the harbor (U.S.A.C.E. 1867:102). Trade in grain assumed considerable significance in Grand Haven during the 1870s. In 1874, for example, one line of steamers delivered 330,271 barrels of flour, 1,183,2686 bushels of wheat, and 37,000 bushels of oats, corn and rye to Grand Haven (Lillie 1980:341). By the late 1880s, tonnage had increased to annual amounts of between 632,159 tons (fiscal year 1887) and 1,450,600 tons (calendar year 1888). Goods received and shipped during 1889 included grain, flour, produce, iron, hardwood and other merchandise and exports included lumber and lumber products, pig iron, produce, flour and other merchandise amounting to 649,370 tons (U.S.A.C.E. 1890:2648).

While these early accounts fail to segregate freights which were destined for local consumption, or derived from local production, from those which were simply being transshipped between Milwaukee, Chicago and Detroit, some inkling into the size of this variable is provided during the early part of the succeeding century. In 1912, for example, of the 802,356 tons of freight (valued at $56,963,534) handled out of the port of Grand Haven upwards of 91 percent was itemized as "through traffic" (U.S.A.C.E. 1912:1147). The following decade, in 1921, it was calculated that of the 598,814 tons of cargo (valued at $46, 123,000 handle at Grand Haven Harbor a full 95 percent represented "through traffic" items (U.S.A.C.E. 1922:1544).

The decreases in both tonnage and cargo values handled by the port in 1921 were attributed to the declining usage of the car ferries and other vessels for the transport of goods. Similarly, those items which continned to be shipped via this route were generally dominated by low valued commodities such as unprocessed ores and other bulk cargoes (U.S.A.C.E. 1922:1544). As early as 1912, it had been further recognized that the better facilities offered by the new interurban electric lines servicing Grand Haven, Holland and Muskegon had a dramatic impact in diverting cargoes to and from Chicago away from he lake trade (U.S.A.c.E. 1912:1150).

The destructive forces of the current and iceflows threatened the integrity of the structures. In order to secure the structures and maintain the channel several repairs and modifications were made to the structures during the opening of the twentieth century. The extension of the revetments was completed, concrete reinforcement was added, along with steel sheet piling and riprap, and several segments were secured with anchors (Figures 2-5). While these improvements structurally secured the harbor and reduced the amount of shoaling into the channel, constant dredging was required to maintain a depth sufficient for navigation with the depth of the channel (at the end of the piers) being gradually increased from 20 ft in 1913 (U.S.A.C.E. 1913:1147) to its current depth of 24 ft. The channel of the Grand River was also dredged during the first and second decades of the twentieth century to provide a navigable depth for vessels moving between the harbor and upriver dock facilities (U.S.A.C.E. 1913:1149).

The Grand Haven Harbor entrance piers and revetments derive their significance in that they reflect the evolution of an aspect of engineering technology employed in Great Lakes federal and private harbor projects during the mid-nineteenth through early twentieth centuries. This period was in one sense marked by the carry over of traditional pre-industrial pier components such as exemplified in the continued utilization of stone filled timber crib substructures, which dominated facility construction activities during the 1867 through 1894 period.

Regional industrialization allowed for certain technological innovations to be adapted to pier construction by the closing decade of the nineteenth century. The development of local Portland cement production utilizing iron and steel furnace slags led to the use of massed and slab concrete superstructure designs at the Grand Haven facility by 1916.

The transition to the use of driven steel sheet piling for pier construction and reconstruction projects can be documented for COE harbor improvement activities in the Great Lakes to a ca. 1934 setting. Its appearance at Grand Haven Harbor, began in 1951. The resultant steel sheet substructures (7,022 ft) set in place over the 32-year period between 1951 and 1983 have obscured approximately 80 percent of the original pier and revetment components (Figures 1 through 5). These, however, have not been destroyed, but, merely sealed with an exterior facade containing the old piers and revetments as a core element and forming what might best be referred to as a stratified composite structure.

Original substructure construction design elements potentially open to visual examination form approximately 20 percent (1,720 ft) of the 8,742 ft long pier and revetment structures. This unaltered element is restricted to Sections D and G of the north revetment (456 ft) and Section P of the south revetment (1,164 ft).

Photographs

1. Photographer: Christopher J. Marzonie
   Date: 31 May 1993
   Negative Location: Commonwealth Cultural Resources Group, Inc., Jackson, MI
   Description: South Pier, Grand Haven Harbor. View to Northwest

2. Photographer: Christopher J. Marzonie
   Date: 31 May 1993
   Negative Location: Commonwealth Cultural Resources Group, Inc., Jackson, MI
   Description: North Pier, Grand Haven Harbor. View to North

3. Photographer: Christopher J. Marzonie
   Date: 31 May 1993
   Negative Location: Commonwealth Cultural Resources Group, Inc., Jackson, MI
   Description: North Pier, Grand Haven Harbor. View to North-Northwest

Bibliography

Baker, I.O.
1894 *A Treatise on Masonry Construction*. John Wiley and Sons, New York.

Blois, J.T. (publisher)
1839 *Gazetteer of the State of Michigan*. New York.

Burchard, E.F.
1914 Cement. In *The New International Encyclopedia* 4:758-762.

Condit, C.W.
1960 *American Building Art: The Nineteenth Century*. Oxford University Press, New York.

Demeter, C.S. and D.J. Weir
1987 *Archaeological Investigations of the Downtown People Mover*. Report 2779. Gilbert/Commonwealth, Inc., Jackson, Michigan.

Dunbar, W.F.
1965 *Michigan: A History of the Wolverine State*. William B. Eerdmans Publishing Company, Grand Rapids.

Everett, F.
1984 *Memorials of the Grand River Valley*. Grand Rapids Historical Society, Grand Rapids.

Farmer, S.
1890 *History of Detroit and Wayne County and Early Michigan*. Silas Farmer and Company, Detroit.

Fuller, G.N.
1916 *Economic and Social Beginnings of Michigan*. Wynkoo? Hallenbeck Crawford Company, State Printers, Lansing.

Hamilton, J.B.
1958 Building and Civil Engineering Construction. *History of Technology* 3:442-488.

Hunt, F.
1840 The Harbors of North America. *Merchants Magazine and Commercial Review* 2:309-321.

Kirby, R.S. and P.G. Laurson
1932 *The Early Years of Modern Civil Engineering*. Yale University Press, New Haven.

Larson, J.W.
1981 *Essayons: A History of the Detroit District U.S. Army Corps of Engineers*. U.S. Army Corps of Engineers, Detroit District.

Lillie, L.C.
1980 *Historic Grand Haven and Ottawa County.* Tri-Cities Historical Society, Grand Haven, Michigan.

Linebaugh, D.W.
1984 Archaeological Investigations at the Old Lighthouse Site, 1984. Manuscript on file at the Michigan Bureau of History, Lansing, Michigan.

Norman, J.G.
1987 *Eighteenth Century Wharf Construction in Baltimore, Maryland.* Master's thesis, Department of Anthropology, the College of William and Mary, Williamsburg, Virginia.

Rubenstein, B.A. and L.E. Ziewace
1981 *Michigan: A History of the Great Lakes State.* Forum Press, St. Louis.

Smith, Robert & Co.
1893 *Michigan and Its Resources.* Robert Smith & Co., Lansing, Michigan.

Strickland, W.
1826 *Reports on Canals, Railways, and Other Subjects Made to the Pennsylvania Society for the Promotion of International Improvements.* H. C. Carey and I. Lea, Philadelphia.

Strickland, W.P.
1860 Old Mackinaw, or The Fortress of the Lakes and Its Surroundings. James Challen and Son, Philadelphia.

Thorpe, T.E.
1898 *A Dictionary of Applied Chemistry.* Longmans, Green and Company, London.

Tuttle, C.R.
1873 *General History of the State of Michigan.* R.D.S. Tyler and Company, Detroit.

U.S. Army Corps of Engineers (U.S.A.C.E.)
1867 *Annual Report of the Chief of Engineers.* Parts 1 and 2. U.S. Government Printing Office, Washington, D.C.

1873 *Annual Report of the Chief of Engineers.* Part 1. Government Printing Office, Washington, D.C.

1876 *Annual Report of the Chief of Engineers.* Part 1. U.S. Government Printing Office, Washington, D.C.

1880 *Annual Report of the Chief of Engineers.* Parts 1-3. U.S. Government Printing Office, Washington, D.C.

1883 *Annual Report of the Chief of Engineers.* Part 2. U.S. Government Printing Office, Washington, D.C.

1889 *Annual Report of the Chief of Engineers.* Part 3. U.S. Government Printing Office, Washington, D.C.

1890 *Annual Report of the Chief of Engineers.* Part 3. U.S. Government Printing Office, Washington, D.C.

1897 *Annual Report of the Chief of Engineers.* Part 3. U.S. Government Printing Office, Washington, D.C.

1908 *Annual Report of the Chief of Engineers.* Part 1. U.S. Government Printing Office, Washington, D.C.

1913 *Annual Report of the Chief of Engineers.* Part 1. U.S. Government Printing Office, Washington, D.C.

1916 *Annual Report of the Chief of Engineers.* Part 3. U.S. Government Printing Office, Washington, D.C.

1922 *Annual Report of the Chief of Engineers.* Part 1. U.S. Government Printing Office, Washington, D.C.

U.S. Army Engineer District, Buffalo (U.S.A.E.D.B.)
1989 *River and Harbor Works Project Maps.* Revised to 30 September 1989. Copy maintained at the U.S. Army Engineer District Office, Buffalo.

U.S. Army Engineer District, Detroit (U.S.A.E.D.D.)
1986 *River and Harbor Works Project Maps.* Revised to 30 September 1986. Copy maintained at the U.S. Army Engineer District Office, Detroit.

1993 Scope of Work for Delivery Order for Determination of Eligibility and Preparation of a National Register Nomination Form for the Piers and Revetments of Grand Haven Harbor, Michigan. Detroit District, Corps of Engineers, Detroit, MI.

U.S. Department of the Army (U.S.D.A.)
1986 *Engineering and Design: Design of Breakwaters and Jetties.* Engineer Manual 1110-2-2904. Prepared by the Corps of Engineers, Office of the Chief of Engineers, Washington, D.C.

Vernon-Harcourt, L.F.
1891 *Achievements in Engineering, During the Last Half Century.* Charles Scribner's Sons, New York.

Wright, F.C.
1914 Breakwater. In *The New International Encyclopedia* 14:698-703.

Verbal Boundary Description

The nominated navigation structures at Grand Haven Harbor, Michigan, consist of COE-owned and maintained properties designated as the north pier (1,414 ft), the south pier (1,495 ft), the north revetment (2,159 ft), and the south revetment (3,674 ft). The combined structures (nominated) extend for a total distance of 8,742 lineal ft and encompass an area of approximately 279,744 sq ft (6.42 acres); calculated at an overall average of 32 ft width.

Boundary Justification

The nominated property is restricted to those structural elements under actual COE ownership and jurisdiction flanking the ship channel entrance at the mouth of the Grand River in the City of Grand Haven, Ottawa County, Michigan. The nominated property does not include the channel or lake bottoms abutting the piers and revetments.

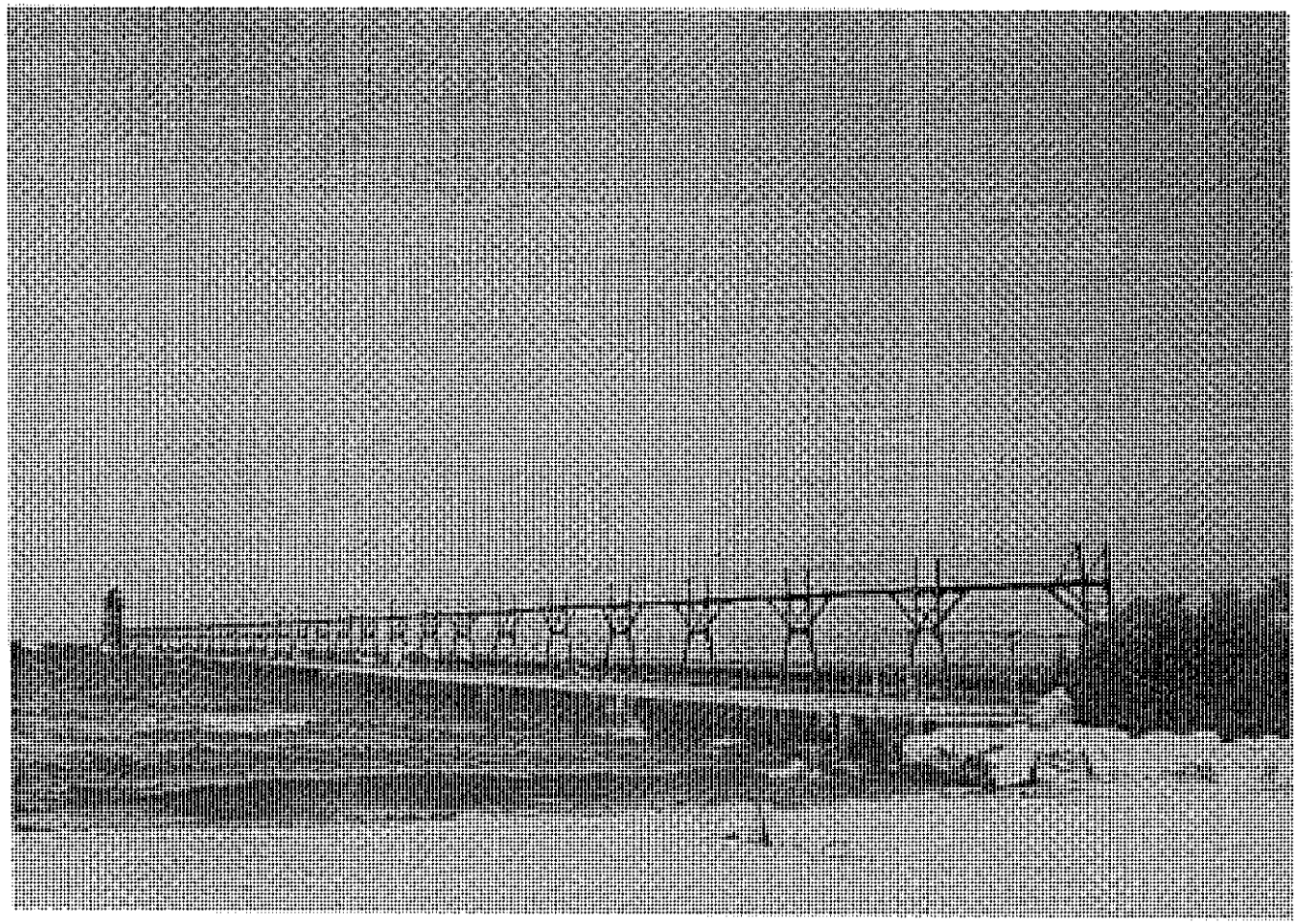

1. South Pier, Grand Haven, Ottawa County, Michigan

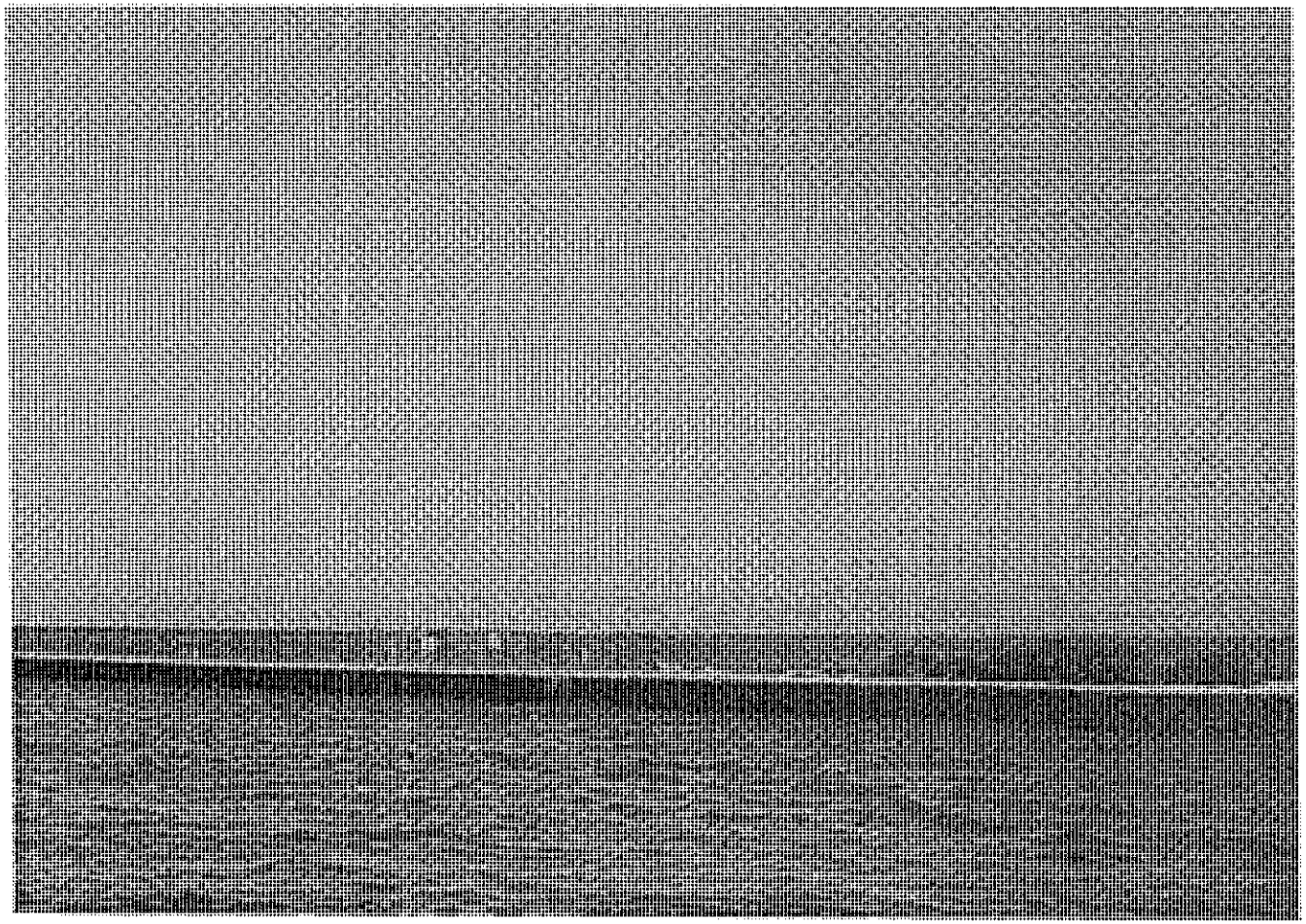

3. North Pier, Grand Haven, Ottawa County, Michigan

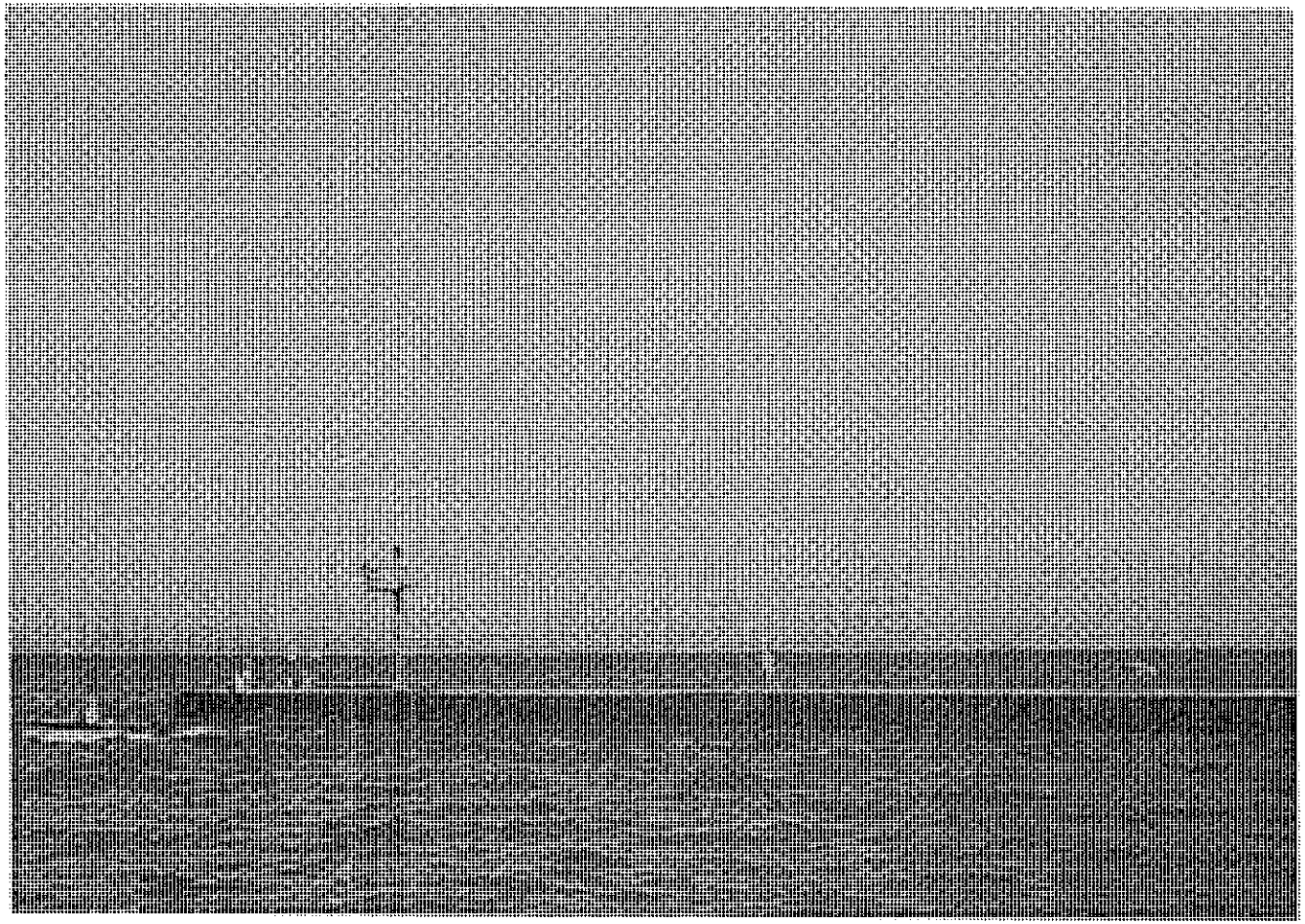

2. North Pier, Grand Haven, Ottawa County, Michigan

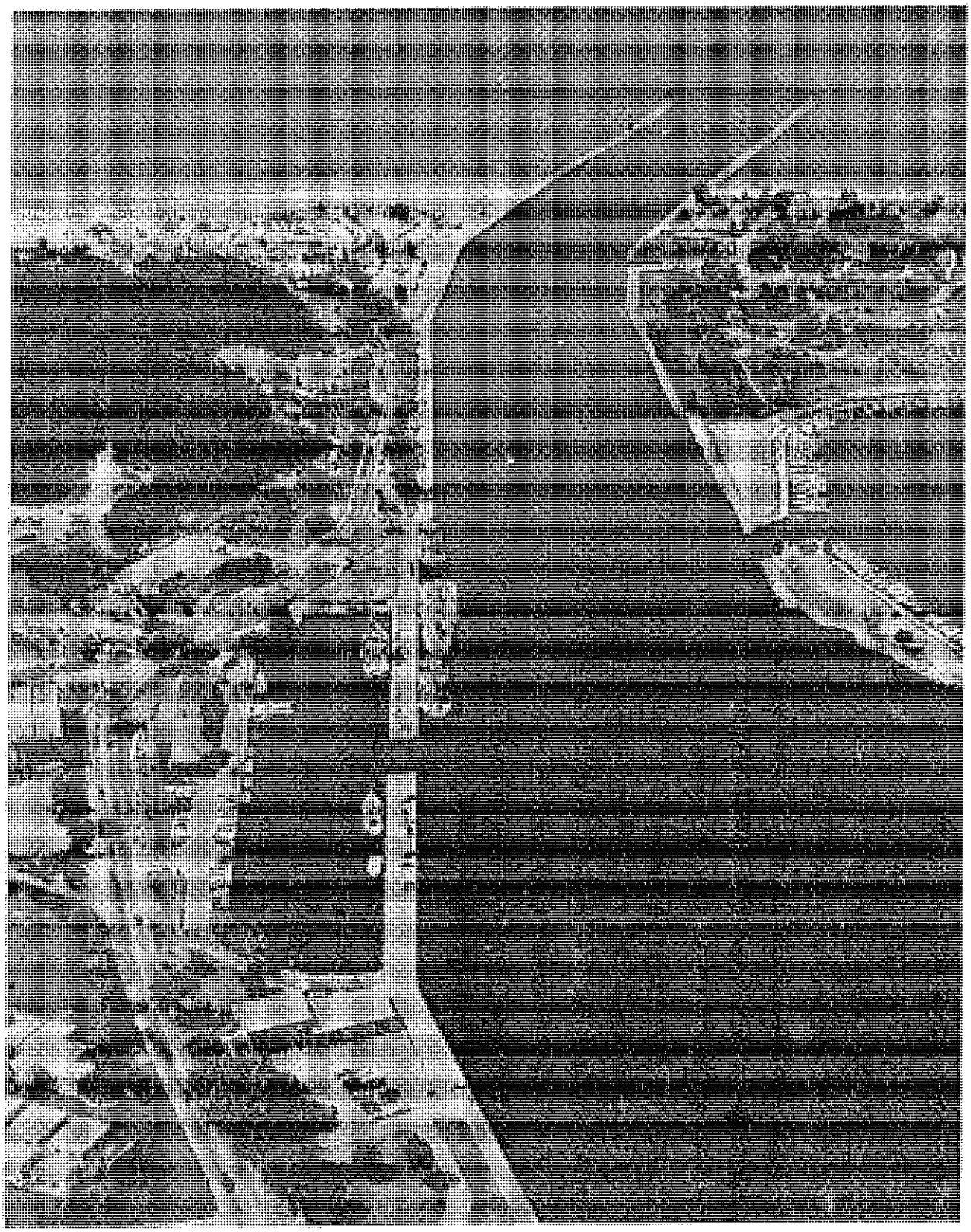

Grand Haven Harbor Pier and Revetment

APPENDIX H

NATIONAL REGISTER OF HISTORIC PLACES REGISTRATION FORM/AMENDMENT FOR "GRAND HAVEN SOUTH PIERHEAD INNER AND ENTRANCE LIGHTHOUSES"

NPS Form 10-900
(Rev. Aug. 2002)

OMB No. 1024-0018

United States Department of the Interior
National Park Service

NATIONAL REGISTER OF HISTORIC PLACES REGISTRATION FORM

This form is for use in nominating or requesting determinations for individual properties and districts. See instructions in *How to Complete the National Register of Historic Places Registration Form* (National Register Bulletin 16A). Complete each item by marking "x" in the appropriate box or by entering the information requested. If any item does not apply to the property being documented, enter "N/A" for "not applicable." For functions, architectural classification, materials, and areas of significance, enter only categories and subcategories from the instructions. Place additional entries and narrative items on continuation sheets (NPS Form 10-900a). Use a typewriter, word processor, or computer, to complete all items.

1. Name of Property

historic name Grand Haven South Pierhead Inner and Entrance Lighthouses

other names/site number Grand Haven South Pier Inner and Outer Lights

2. Location

street & number In Lake Michigan on S pier at Grand River mouth 0.2 mi W of Grand Haven State Park not for publication ____

city or town Grand Haven, Grand Haven Township vicinity X

state Michigan code MI county Ottawa code 139 zip code 49417

3. State/Federal Agency Certification

As the designated authority under the National Historic Preservation Act, as amended, I hereby certify that this ____ nomination X request for determination of eligibility meets the documentation standards for registering properties in the National Register of Historic Places and meets the procedural and professional requirements set forth in 36 CFR Part 60. In my opinion, the property X meets ____ does not meet the National Register Criteria. I recommend that this property be considered significant ____ nationally ____ statewide X locally. (____See continuation sheet for additional comments.)

Signature of certifying official 14 MAY 09 Date

United States Coast Guard
State or Federal agency or Tribal government

In my opinion, the property ____ meets ____ does not meet the National Register criteria. (____ See continuation sheet for additional comments.)

Signature of commenting official/Title Date

State or Federal agency and bureau

4. National Park Service Certification

I, hereby certify that this property is: Signature of Keeper Date of Action

____ entered in the National Register
____ see continuation sheet.
____ determined eligible for the National Register
____ see continuation sheet.
____ determined not eligible for the National Register
____ removed from the National Register
____ other (explain): ____

5. Classification

Ownership of Property
(Check as many boxes as apply)

___ private
___ public-local
___ public-state
_X_ public-federal

Category of Property
(Check only one box)

___ buildings
___ district
___ site
_X_ structure
___ object

Number of Resources within Property
(Do not include previously listed resources in the count)

Contributing	Noncontributing	
0	0	buildings
0	0	sites
3	0	structures
0	0	objects
3	0	Total

Name of related multiple property listing

Light Stations of the United States

Number of contributing resources previously listed in the National Register

0

6. Function or Use

Historic Functions
(Enter categories from instructions)

Cat: Transportation
Sub: Water-related

Current Functions
(Enter categories from instructions)

Cat: Transportation
Sub: Water-related

7. Description

Architectural Classification
(Enter categories from instructions)

No Style

Materials
(Enter categories from instructions)

foundation Concrete
walls Cast iron.
Corrugated metal over wood frame.
roof Cast iron. Corrugated Iron
other Lantern: Cast iron, glass glazing

Narrative Description
(Describe the historic and current condition of the property on one or more continuation sheets.)

See continuation sheet

Narrative Description

Summary

The Grand Haven South Pierhead Inner and Entrance Lighthouses sit atop the south pier at the confluence of Grand River and Lake Michigan near the City of Grand Haven in Ottawa County, Michigan. These lighthouses are a pair of range lights aligned to mark the entry to the port of Grand Haven. The Inner Light is a conical cast iron tower supporting a lantern. It is 51 feet tall and painted red. This structure was constructed in 1905 at the south pierhead and was relocated to its present position in 1907. It is identified as number 18975 on the regional light list. The Entrance Light is a rectangular metal-sheathed, two story wooden building with a gable roof and lighthouse lantern. It was originally constructed in 1875 as a fog signal building and modified to include a lighthouse lantern in 1907. The Entrance Light is painted red and its roof is gray. It is designated as number 18965 on the regional light list. The property's Elevated Walkway is approximately 0.2 mile long and is painted black. It extends from shore along the pier to the two lighthouses. It was built to provide safe access when environmental conditions made walking along the pier hazardous. The Inner and Entrance Lighthouses are owned by the U.S. Coast Guard and operated as automated aids to navigation. The Elevated Walkway is owned by the City of Grand Haven. The two lighthouses and walkway are in fair condition and retain much of their original historical character.

The following description is based on research concerning the design of the lighthouses and elevated walkway, construction plans, and other information. A site inspection visit to the property was made by Ms. Jayne Aaron, Architectural Historian, and Mr. Timothy McGrath, Photographer, both of engineering-environmental Management, Inc. (e^2M, Inc.).

Contributing Resources

This property consists of three contributing resources. They include the Inner Lighthouse, Entrance Lighthouse, and Elevated Walkway. The Inner and Entrance Lighthouses are owned by the U.S. Coast Guard. The Elevated Walkway is owned by the City of Grand Haven. These resources sit atop the south pier at the entrance to the port of Grand Haven. The south pier and its partner, the north pier, are navigation structures flanking the mouth of the Grand River. They are owned by the U.S. Army Corps of Engineers and extend approximately 0.2 mile from shore into the waters of Lake Michigan. They shelter the entrance channel for the port. The north and south piers were listed on the National Register of Historic Places in 1996 as the *Piers and Revetments at Grand Haven Harbor, Michigan.*

Inner Lighthouse

The South Pierhead Inner Lighthouse was constructed in 1905 at what was then the south pier's offshore end. It was relocated to its present position in 1907. It is 51 feet tall and includes a conical cast iron tower supporting a lantern. This light is identified as number 18975 on the Great Lakes regional light list. The lighthouse's foundation is a concrete pad that sits upon the south pier's deck. It is approximately 31 inches tall and 15 feet in diameter.

Exterior

The lighthouse sits atop the concrete pad and is painted red. It is conical and constructed of 12 telescoping courses of curved cast iron plates. The bottom two courses are 12 feet, 6 inches in diameter and flush with one another. Together, they are 8 feet tall. The courses above this are successively smaller in diameter with each being 3 inches less than the one below. The top course of cast iron plates has a diameter of 10 feet. It supports a circular iron platform surrounded by a gallery railing. The lighthouse's circular lantern sits centered on this platform. The lantern has a metal roof topped with a vent ball and lightning rod. The lantern's glazing is supported by crossed metal mullions arranged in a repeating "X" pattern

Interior

The lighthouse is entered through a metal watertight door approximately 3 feet wide by 6 feet, 8 inches tall. The doorway base is approximately 1.5 feet about the lighthouse's concrete foundation. The first story room is 12 feet, 6 inches in diameter. Electrical panels attached to the wall are used to control the commercial electricity brought by cable to the lighthouse from shore. A cast iron spiral stairway leads upward to the second story landing which is approximately 12 feet above the first story floor.

The second story is 11 feet, 8 inches in diameter. It includes the spiral stairway and a half-round metal floor 10 feet, 6 inches in diameter that covers one-half of the tower's interior at this level. This floor does not touch the second story's tower wall. It is supported by metal beams and a gap separates it from contact with the surrounding wall. On the eastern side, the wall next to the half-round floor is pierced with a doorway that formerly provided access to and from the elevated walkway outside. The original door has been removed and the doorway is covered with a metal plate. A circular port-light window pierces the wall on the south side. It is approximately 18 inches in diameter. The spiral stairway continues upward to the third story.

The third story room is 10 feet 8 inches in diameter. Its metal floor is approximately 8 feet above the second story floor. The surrounding wall is pierced with three circular port-light windows that are approximately 16 inches in diameter. These face south, west, and north. Electrical control boxes are attached to the wall. A metal double-rung ladder leads upward to a trap door opening in the ceiling. This provides access to the lighthouse's lantern room.

The lantern room is circular and is 7 feet, 2 inches in diameter with a metal floor. The room's parapet wall is approximately 3 feet tall and made with curved cast iron plates. Above this, crossed metal mullions form a repeating "X" pattern. These mullions hold the lantern's glazing. On the east side, there is a full-size door with a metal lower panel and a single-pane glass upper panel. This door is convex and curves in conformance with the circular lantern's exterior. It provides access to the lantern gallery, outside. The gallery is 2 feet, 5 inches wide and is surrounded by a circular 1-foot tall metal railing that is approximately 2 feet above the deck. The railing is made with iron bars that are 1 inch wide. These are fastened across one another, forming a repeating "X" pattern.

The lighthouse's optic is a modern, automated 250 mm acrylic beacon supported by a pedestal in the center of the lantern room floor. It signals a red light that occults every 4 seconds. The optic's focal plane is 52 feet above the level of Lake Michigan. It is visible for 4 miles in clear weather.

Entrance Lighthouse

The South Pierhead Entrance Lighthouse is located at the south pier's offshore end. It is a gable roof, wood-frame building sheathed with corrugated metal that sits atop a concrete foundation. The lighthouse building is 20 feet wide by 37 feet long. It stands 36 feet tall. The lighthouse superstructure is painted red. Its metal roof is painted gray. An octagonal lantern sits atop a rectangular platform above the building's western end. This light is identified as number 18965 on the Great Lakes regional light list.

Exterior

The concrete foundation sits atop the south pier's offshore end. It stands 10 feet tall, and contains the building's basement. The foundation's geometry in plan includes a rectangle and a triangle. The rectangular part is approximately 25 feet wide by 50 feet long. It supports the lighthouse. The triangular part adjoins the rectangle's western side and extends 14 feet westward towards the open waters of Lake Michigan. Its western tip is pointed like the prow of a ship and the sides are concave, flaring outward towards the top. This configuration helps deflect the force of incoming waves upward and away from the lighthouse.

The foundation's triangular concrete western section is pierced on the northwest side with a round port-light window that is 8 inches in diameter. The northern elevation is pierced with three evenly spaced round port-light windows that are approximately 24 inches in diameter, and an overhead door that is 6 feet, 8 inches wide by 7 feet, 2 inches tall. The eastern elevation has a metal door near the northeast corner that is 3 feet wide by 6.5 feet tall. This side also has a former window opening near the southeast corner. This was 5 feet tall by 2 feet, 4 inches wide. It has been filled with concrete blocks. The southern elevation has four round port-light windows that are approximately 24 inches in diameter. All the foundation windows are now covered or filled.

The foundation's topside periphery forms a walkway around the lighthouse superstructure. This is bounded by a metal railing on the north, east, and south sides. The pointed western end is bounded by a 3.5-foot tall concrete wall. There is a set of concrete stairs with metal railing at the foundation's eastern end. This provides access from the south pier's deck to the lighthouse's first story.

The lighthouse's superstructure sits atop the concrete foundation. This is a two story, gable roofed, wood frame building that is 37 feet long by 20 feet wide by 36 feet tall. It is constructed with a timber frame covered by wooden planks sheathed with corrugated metal. The western end of the gable roof has been cut back to provide space for a rectangular platform upon which the lighthouse's lantern is mounted. The lantern is octagonal and surmounted by a ventilator and lightning rod.

The lantern platform is approximately 11 feet long by 11 feet wide. It is surrounded by a steel pipe railing. The lantern is centered on the platform, surrounded by an open-air gallery. A modern automated fog signal is affixed to the lantern gallery's deck. It sounds 2 blasts every 30 seconds from April to November. An automated fog detector is also mounted on the gallery.

The lighthouse's principal entry pierces the center of the superstructure's first story on the east side. This doorway is 3 feet wide by 6 feet, 8 inches tall. It is flanked on left and right by window openings that are 2 feet, 6 inches wide by 5 feet tall. The first story has three rectangular windows on both the north and south sides. These are 2 feet, 6 inches wide by 5 feet tall. The superstructure's second story gable ends are both pierced by a rectangular window. These windows are approximately 2 feet, 6 inches wide by 5 feet tall. All the superstructure windows are covered.

Interior

The basement inside the foundation is divided into three principal rooms. The eastern room is 13 feet long by 23 feet, 10 inches wide. Its interior walls are covered with brick. The middle room is 36 feet long by 23 feet, 10 inches wide. It includes a stairway to the first story and the building's furnace. The western room is triangular with a maximum width of 14 feet. It contains four steel fuel storage tanks.

The superstructure's first story dimensions are 40 feet long by 24 feet wide. It does not extend over the basement's triangular western room. The first story interior has one large room that includes a concrete floor and two elevated 6-inch tall concrete platforms. There is also a small wood-framed room with paneling. The first story interior's four surrounding walls are not paneled. The wood framing is exposed. Wooden boards are nailed diagonally on the outer side. The ceiling joists are exposed, also. Four vertical steel beams near the first story's western end extend up to the second story and provide support for the lantern. A wooden ship's ladder with pipe handrails leads up to the second story through an opening in the ceiling.

The ship's ladder provides access to landing on the second story. Steel beams extend upward and support the lantern and its platform. A catwalk leads eastward from the second story landing to a doorway in the east end that is covered. This doorway formerly provided access to and from the south pier's Elevated Walkway. A small room adjoins the second story landing on the west side. It contains a ladder leading up to a trapdoor in the ceiling. This provides access the lantern room.

The lighthouse's octagonal lantern is approximately 6 feet in diameter and sits centered atop a rectangular platform above the second story's western end. The lantern's parapet wall is approximately three feet tall and has wainscoting on the interior. The glazing above this includes eight rectangular panes held by vertical mullions. A modern automated VRB-25 marine beacon sits atop a pedestal in the center of the lantern room. It signals a red flash every 10 seconds. The optic's focal plane is 42 feet above water level and it is visible for 15 miles in clear weather.

South Pier Elevated Walkway

An Elevated Walkway extends approximately 0.2 mile from shore along the south pier to the two lighthouses. Installed in 1922, it was built to allow safe access to the lighthouses when environmental conditions made walking along the pier dangerous. The Elevated Walkway provided access to doorways on the second story levels of both lighthouses, but is no longer used for this purpose. It was designated surplus property by the Coast Guard in the 1980s and was transferred to the City of Grand Haven.

The walkway includes a steel framework including vertical supports at intervals of approximately 25 feet. This supported a wooden catwalk that was approximately 12 feet above the south pier's deck. The legs of the vertical supports incline inward toward an arched cross brace approximately 8 feet above the pier's deck. The supports then extend up an additional 8 feet vertically. Two horizontally strung steel cables extend along the framework on either side above the catwalk level. These served as guard rails. Electric lamps are attached at the top of each vertical support on the walkway's northern side. These were installed in the 1980s.

There are only four Michigan ports where original elevated walkways extend along a pier to the pierhead lighthouse. They include Grand Haven, St. Joseph, South Haven, and Manistee. Of these, only Grand Haven and St. Joseph have two range lighthouses and an elevated walkway. The *St. Joseph North Pier Inner and Outer Lights* and elevated walkway in Berrien County, Michigan, were listed on the National Register of Historic Places in 2005.

Changes in Physical Appearance and Integrity Issues

The property's contributing resources retain substantial historical integrity. Changes that have been made are limited and do not detract from the property's original character. The principal changes to the two lighthouses relate their positioning on the south pier. They have been relocated from time to time due to construction projects that have lengthened or improved the pier.

The Entrance Lighthouse was originally constructed 1875 as a fog signal building that did not have a lantern. It was built at what was then the head of the south pier. Construction projects in the 1880s, 1890s, 1920s and 1950s lengthened or improved the south pier. The fog signal building was moved to its present position at the south pierhead in 1907. It was converted to a lighthouse at that time by installing a platform and mounting a lantern atop its western gable end. The lantern was relocated from the predecessor Grand Haven Lighthouse that had been built onshore nearby in the 1850s. The other substantial change to the lighthouse structure dates to 1922 when its concrete foundation was built. This elevated the lighthouse and provided a basement and the distinctive ship's prow configuration at the pierhead. The structure's corrugated sheet metal siding was also added in 1922. It protects the building's wooden structure. The 1922 work included replacing the building's original 1875 windows. It had been initially constructed with six small 18-inch square windows along both the first story's north and south sides. They were replaced with three larger rectangular windows on these sides.

The equipment installed in the Entrance Lighthouse has also changed through time. When constructed as a fog signal building in 1875, it was equipped with a coal-fired boiler and a steam-power siren. Its characteristic was a 5-second blast followed by a 35-second quiet interval. In 1902 this equipment was replaced with air compressor equipment powered by oil engines and a compressed-air siren fog signal. This signal's characteristic was a 3-second blast and a 37-second silent interval. A Type F Air Diaphone was installed in the 1940s. Its characteristic was a first blast 1.5 seconds, silent 2 seconds, second blast 1.5 seconds, followed by 25 seconds of quiet. In 1969, the diaphone fog signal was replaced with a higher pitched whistle.

When the 1875 fog signal building was converted to a lighthouse in 1907, the optic installed was a sixth order Fresnel lens. This was removed in 1977 and replaced with an acrylic beacon. This sixth order lens was loaned for display to the Netherlands Museum in Holland, Michigan. The lighthouse's existing optic is a VRB-25 marine beacon installed in the 1990s.

The Inner Lighthouse was originally built in 1905 as the south pierhead light. It was relocated to its present position in 1907 when the pier's existing range light system was established. This work included converting the pierhead fog signal building to become the south pier's Entrance Lighthouse. The Inner and Entrance Lighthouses are approximately 600 feet apart.

The Inner Lighthouse was originally equipped with a fourth order Fresnel lens lighted using an oil wick lamp. This lens had been installed circa 1855 in the predecessor Grand Haven Lighthouse that stood nearby onshore. It was installed in the south pier Inner Lighthouse in 1907 when the older lighthouse's lantern was relocated to the Entrance Lighthouse. The Inner Lighthouse was electrified in 1918 with a 200-watt bulb inside a red glass globe as the lighting element. Its characteristic was fixed red with a one-second red flash every 30 seconds. The lighthouse's fourth order lens was replaced with an acrylic beacon in 1977. This Fresnel lens was loaned for display to the Tri-Cities Historical Museum in Grand Haven where it may be seen today.

The south pier's Elevated Walkway also retains substantial integrity. The changes that have been made were accomplished in 1987 and 1988. That work included reinforcing the walkway's vertical supports and removing the catwalk's wood planking for safety reasons. This improved the structure's physical integrity and made it safer because it is no longer be used as a walkway. The 1980s work also included installing electric lights along the north side of the vertical supports. These make the south pier an impressive sight at night when the entire length of the walkway is lighted.

8. Statement of Significance

Applicable National Register Criteria (Mark "X" in one or more boxes for the criteria qualifying the property for National Register listing)

X A Property is associated with events that have made a significant contribution to the broad patterns of our history.

___ B Property is associated with the lives of persons significant in our past.

X C Property embodies the distinctive characteristics of a type, period, or method of construction or represents the work of a master, or possesses high artistic values, or represents a significant and distinguishable entity whose components lack individual distinction.

___ D Property has yielded, or is likely to yield information important in prehistory or history.

Criteria Considerations (Mark "X" in all the boxes that apply)

___ A owned by a religious institution or used for religious purposes

___ B removed from its original location

___ C a birthplace or a grave

___ D a cemetery

___ E a reconstructed building, object, or structure

___ F a commemorative property

___ G less than 50 years of age or achieved significance within the past 50 years

Areas of Significance
(Enter categories from instructions)

Commerce
Transportation
Maritime History
Architecture
Engineering

Period of Significance
1907 to 1959

Significant Dates
1907, 1922

Significant Person
(Complete if Criterion B is marked above)
N/A

Cultural Affiliation
N/A

Architect/Builder
Office of Lighthouse Engineer
9th District
Milwaukee, WI

Narrative Statement of Significance (Explain the significance of the property on one or more continuation sheets.)

9. Major Bibliographical References

Bibliography (Cite the books, articles, and other sources used in preparing this form on one or more continuation sheets.)

Previous documentation on file (NPS)

___ preliminary determination of individual listing (36 CFR 67) has been requested
___ previously listed in the National Register
___ previously determined eligible by the National Register
___ designated a National Historic Landmark
___ recorded by Historic American Buildings Survey # _____
___ recorded by Historic American Engineering Record # _____

Primary Location of Additional Data

___ State Historic Preservation Office
___ Other State agency
X Federal agency
___ Local government
___ University
X Other

Name of repository:
Michigan Maritime Museum
U.S. Coast Guard Historian's Office

Narrative Statement of Significance

The Grand Haven South Pierhead Inner and Entrance Lighthouses are a remarkably well-preserved early twentieth century Great Lakes range light system. They have provided for safe navigation by mariners using the port of Grand Haven for than a century. These aids to navigation operate in tandem to mark the safe course for vessels entering the mouth of the Grand River. A vessel seeking to enter the Grand River from Lake Michigan must pass between the north and south piers at the river's mouth. The proper course can be determined by aligning the taller Inner Lighthouse and its beacon directly behind the shorter Entrance Lighthouse and its beacon. Thus, this property exemplifies the Federal government's extensive aids to navigation system in the Great Lakes region and how it promotes maritime safety. This property's three contributing resources, Inner Lighthouse, Entrance Lighthouse and Elevated Walkway, are one of only two range light and walkway groups in Michigan that remain extant. The Inner Lighthouse was built in 1905 and the Entrance Lighthouse, originally constructed as a fog signal building in 1875, was converted to a lighthouse in 1907. The Elevated Walkway was built in 1922 and retains its original association with the property. It exemplifies how lighthouse keepers fulfilled their duties even when hazardous environmental conditions made access difficult to the lights in their care.

This lighthouse property is locally significant to the city of Grand Haven and Ottawa County for its association with the history of this area's maritime commerce, transportation, and architecture. It qualifies for National Register of Historic Places listing under Criteria A and C. In terms of Criterion A, this property is associated with events that made an important contribution to broad patterns of Michigan's maritime, commerce and transportation history. It also demonstrates the growth of the Federal role in providing for safe navigation on the Great Lakes. This property also qualifies for listing under Criterion C. It embodies and exemplifies distinctive architectural and engineering characteristics of early twentieth century Great Lakes range light systems built atop piers. The period of historical significance for the Grand Haven South Pier Inner and Entrance Lighthouses begins in 1907 when they were relocated and modified to form a range light system. The property's period of historical significance ends in 1959, the most recent year of its operation 50 years before the present. The lighthouses and associated walkway retain good historic integrity. Their design, materials and workmanship are little altered from when originally built. Interior and exterior modifications to the lighthouses and elevated walkway have been limited and are largely superficial. The property's location, setting, association, and feeling remain little changed from its period of historical significance.

This request for determination that the property is eligible for listing on the National Register is submitted as an individual registration associated with the overarching multiple property submission, *Light Stations of the United States*. Information that is common and historic contexts presented in the multiple property documentation form are not repeated here. The emphasis in this form is on additional facts and details linking the property with the history of its geographic location and that support its specific significance.

Significance under Criterion A

The Grand Haven South Pierhead Inner and Entrance Lighthouses have been an important aid to navigation since this range light system was officially established in 1907. This property is historically significant because of its association with events that made a contribution to the broad historical patterns of Michigan's maritime transportation and commerce. These lighthouses exemplify the Federal government's role in promoting safe use of the Great Lakes and the port of Grand Haven for shipping, and for providing a system of navigational aids in Michigan state waters.

These lighthouses are located at the west end of the Grand Haven Pier. They form a set of range lights that assist mariners to enter the harbor. This property's signal lights and their daymarks have guided mariners along Lake Michigan and safely into the port of Grand River both night and day from 1907 to the present.

Significance under Criterion C

This property qualifies for listing under National Register Criterion C because of its qualities relating to design, engineering and architecture. The South Pierhead Inner and Entrance Lighthouses and associated Elevated Walkway embody distinctive characteristics of a type, period, and method of construction. It is a good example of early twentieth century lighthouse design and possesses engineering and architectural aspects that exemplify the manner of construction, configuration and operation of a range light system built atop navigational structure piers. While this type of navigational aid was characteristic of the entry to various Great Lakes ports during the early twentieth century, existing examples are rare.

Lighthouse design changed gradually during the late nineteenth to early twentieth century and several distinct types or styles emerged. During this period, lighthouse engineers developed a set of standard designs for use in various environmental settings. Lake Michigan ports, more than those on any of the other Great Lakes, are known for their lighthouses on piers and breakwaters. Pierhead lights had to be strong enough to withstand the impact of waves and vibration, yet compact and lightweight enough to fit into the limited space at the end of a pier. The Grand Haven Inner and Entrance Lighthouses were designed and engineered for permanence, stability, and self contained operations. This is important because the property's location on Lake Michigan's eastern shore is characterized by extreme winter weather conditions. These lighthouses' good state of preservation attests to the appropriateness of their design to this environmental setting and high quality of construction.

The Grand Haven south pier lighthouses are one of only four remaining pier light properties in Michigan with elevated walkways. The other three are at St. Joseph, Manistee, and South Haven. Grand Haven is one of only two locations in Michigan where two lighthouses form a range light set and still associated with their original elevated walkway.

Historic Context

Initial settlement of the Grand Haven area began in 1827 when an American Fur Company trading post was established a few miles up the Grand River from Lake Michigan. In 1836, the schooner *St. Joseph* began making regular trips between Chicago and the growing community of Grand Haven. The development of maritime transportation brought an increasing number of immigrants to the area through time and also spurred commerce. The lower Grand River provided one of the widest and deepest natural harbors on Lake Michigan. These characteristics promoted population and economic growth in the area. In the 1840s, the number of sawmills at Grand Haven had increased to six with a capacity of 60,000 board-feet of lumber per day.

The first lighthouse at Grand Haven was completed in the summer of 1839. It was located on what was known as "lighthouse acre," a small waterfront site at the foot of the bluff near the south shore of the Grand River mouth. The first lighthouse structures consisted of a short stone tower and a separate stone dwelling. A storm on 17 December 1852 destroyed both structures even though they were located near the property's inland boundary and a timber wall had been built between them and the shoreline.

A replacement lighthouse was constructed inland from the original lighthouse site and at a higher elevation. It was located 50 feet above lake level on a bluff. This light began operating at the start of the 1855 navigation season. Its lighthouse was a cylindrical stone tower that supported an octagonal cast iron lantern. A short covered walkway connected it with a one-and-a-half story keepers dwelling. The lighthouse's optic was a fourth order Fresnel lens. The focal plane of this light was 150 feet due to its location on the bluff. It was visible for 8 miles in clear weather. The light station at Grand Haven included a fog bell mounted in a building erected near the waterfront. It was equipped with a Stevens automated bell striking mechanism.

A significant development in Grand Haven's evolution as a commercial port occurred in the late 1850s. The Detroit and Milwaukee Railroad decided to establish a direct rail line route between Detroit and Milwaukee, Wisconsin. Instead of building it around the southern end of Lake Michigan and through Chicago, the company selected Grand Haven as the eastern terminus of a railroad car ferry that would cross the lake to Milwaukee. This began operation in 1858.

The Detroit and Milwaukee Railroad company determined that its cross-lake ferry business required navigational improvements to the Grand River area. In 1859, the company began building a pier on the southern side of the Grand River mouth. This included erecting a small private beacon light at the offshore end of the new pier.

Grand Haven's prominence as a maritime port increased during the late nineteenth and early twentieth centuries. The harbor recorded 8,000 vessel entries and departures in 1866, carrying a total of 18,000 tons of cargo. Cargo tonnage increased through time. There were 623,159 tons in fiscal year 1887 and 1,450,600 tons in calendar year 1888. Goods received and shipped during 1889 included grain, flour, produce, iron, hardwood, and general merchandise. Exports included lumber and lumber products, pig iron, produce, flour, and other merchandise.

Several improvements were made to the port's aids to navigation during this period. In 1868, the lighthouse tower on the bluff was raised four feet by adding brickwork at the top and its original lantern, salvaged from the predecessor lighthouse, was replaced with a new one. The light station's fog bell building was moved nearer the Grand River mouth in 1869, though it remained onshore. Work in 1870 and 1871 included erecting a light tower on the south pierhead and building a wooden elevated walkway from there to shore. A new fog signal building was built next to the pierhead light in 1875. After the pier was extended in 1883, the light and fog signal were moved to the new pierhead and the elevated walkway was extended. These navigation aids were moved again in 1895 after the pier was extended farther offshore.

The American Bridge Company erected a 51-foot tall cast iron tower at the south pier's offshore end in 1905. The new lighthouse was equipped with the fourth order Fresnel lens removed from the old lighthouse on the bluff. This tower was moved in 1907 to a position nearer to shore where it could serve as the rear beacon of a range light system. At the same time, the fog signal building was moved to the end of the south pier and modified to mount a lantern atop its western gable end. A sixth order Fresnel lens was installed as its optic. The result of these changes was that the fog signal building on the pierhead was converted into the range's front light, and the cast iron tower became the rear range light.

A concrete foundation was built for the pierhead lighthouse in 1922. The lighthouse was placed atop it, and new windows, doors and corrugated metal siding were added to the structure. The south pier's wooden walkway was dismantled also in 1922, and replaced with the metal one existing today. The south pier was rebuilt in 1954 and surrounded with steel interlocking sheet piling. The pier's range light system was automated around this time. The Coast Guard sold the 1855 lighthouse's keepers dwelling as excess property in 1956. It still exists and is privately owned. The associated light tower built in 1855 has been demolished.

During the late 1980s the Coast Guard determined that the elevated walkway built in 1922 was excess property and should be demolished. In response, a group of local residents established a committee to preserve it. The walkway was subsequently transferred to the City of Grand Haven. The citizens' committee raised funds and provided volunteer labor to reinforce the structure's vertical supports, remove the catwalk's wooden floorboards, and install a series of electric lights that extended the walkway's entire length. The outcome was to preserve the elevated walkway's historical association with the south pier lighthouses.

The Grand Haven South Pierhead Inner and Entrance Lighthouses and associated Elevated Walkway are a prominent landmark in the City of Grand Haven. They remain a significant monument to Grand Haven's important association with maritime commerce.

Demeter, C. Stephan, and Kathryn C. Egan. 1993. Piers and revetments at Grand Haven, MI. National Register of Historic Places nomination form.

Hyde, Charles. 1996. *The northern lights: lighthouses of the Upper Great Lakes.* Reprint. Wayne State University Press, Detroit, MI.

Pepper, Terry. 2009. Grand Haven Pier Lights, Grand Haven, Michigan. Web page: http://www.terrypepper.com/lights/Michigan/grandhavenpier/grandhaven.htm

Sapulski, Wayne A. 2001. *Lighthouses of Lake Michigan, past and present.* Wilderness Adventure Books, Manchester, MI.

U.S. Army Corps of Engineers. 1961. U.S. Survey of Northern and Northwestern Lakes - Great Lakes Pilot. Detroit, MI.

U.S. Bureau of Lighthouses. 1922. Grand Haven, Michigan, South Pierhead Front Light & Fog Signal, east & west elevations. Office of Lighthouse Superintendent, Twelfth District, Milwaukee, Wis.

_____. 1922. Grand Haven, Michigan, South Pierhead Front Light & Fog Signal, north elevation. Office of Lighthouse Superintendent, Twelfth District, Milwaukee, Wis.

U.S. Coast Guard. 1992. Grand Haven South Pierhead Outer Light inspection findings.

_____. 1996. Biennial inspection report, Grand Haven South Pier Inner Light.

_____. 2005. Light List, Volume VII, Great Lakes. COMDTPUB P16502.7.

U.S. Department of Commerce and Labor, Lighthouse Board. 1898. "List of beacons, buoys and daymarks of the United States on the northern lakes and rivers." Washington, DC.

_____. 1902. Grand Haven South PHD Inner Light. Office of Engineer, Ninth Light House Dist., Milwaukee, Wis., Feb. 10th 1902.

_____. 1906. "List of lights and fog signals of the United States on the northern lakes and rivers." Washington, DC.

U.S. Department of the Interior. 1979. Grand Haven South Pierhead Inner Lighthouse. Historic American Engineering Record (HAER) Report.

_____. 2002. Grand Haven South Pierhead Lights. Maritime Heritage Program, Inventory of Historic Light Stations, Michigan Lighthouses. Web page: http://www.cr.nps.gov/maritime/light/grhavens.htm.

10. Geographical Data

Acreage of Property less than 1 acre

UTM References

		Zone	Easting	Northing
Outer Light	1	16	560520	4767200
Inner Light	2	16	560700	4767220
Elevated Walkway	3	16	560800	4767230

Verbal Boundary Description:

The foundation of each lighthouse and the base of the elevated walkway define the boundary. The Entrance Lighthouse's concrete foundation sits atop the south pier's offshore end and is approximately 50 feet long by 24 feet wide with a 14-foot triangular extension at the western end. The Inner Lighthouse has a 32-inch tall concrete foundation that is 13 feet, 4 inches in diameter. The base of the Elevated Walkway consists of the bottom each vertical support where the two legs of each individual support are bolted to the deck of the south pier.

Boundary Justification:

The property to be determined for National Register eligibility includes the property's three contributing resources. The two lighthouses are owned by the U.S. Coast Guard. The elevated walkway is owned by the City of Grand Haven. The south pier at Grand Haven, on which the lighthouses and walkway sit, is the property of the U.S. Army Corps of Engineers and is not included in this registration.

11. Form Prepared By

name/title Daniel Koski-Karell, Ph.D., USCG Headquarters Environmental Management Office

organization United States Coast Guard (COMDT CG-443) date 11 May 2009

street & number 1900 Half Street SW telephone 202.475.5683

city or town Washington state DC zip code 20593-0004

Additional Documentation

Submit the following items with the completed form:

Continuation Sheets

Map: A **USGS map** (7.5 or 15 minute series) indicating the property's location.

Photographs: Representative **black and white** photographs of the property.

Property Owner

name U.S. Coast Guard Headquarters

street & number 2100 Second Street SW telephone 202.267.1587

city or town Washington state DC zip code 20593

Paperwork Reduction Act Statement: This information is being collected for applications to the National Register of Historic Places to nominate properties for listing or determine eligibility for listing, to list properties, and to amend existing listings. Response to this request is required to obtain a benefit in accordance with the National Historic Preservation Act, as amended (16 U.S.C. 470 et seq.). A federal agency may not conduct or sponsor, and a person is not required to respond to a collection of information unless it displays a valid OMB control number.

Estimated Burden Statement: Public reporting burden for this form is estimated to average 18.1 hours per response including the time for reviewing instructions, gathering and maintaining data, and completing and reviewing the form. Direct comments regarding this burden estimate or any aspect of this form to Keeper, National Register of Historic Places, 1849 "C" Street NW, Washington, DC 20240.

This is a portion of the "Grand Haven, Mich." 7.5 minute quadrangle topographic map, scale 1:24,000 (United States Geological Survey 1972, photoinspected 1980).

0 2000 ▲
Feet North

Grand Haven South Pierhead
Inner and Entrance Lighthouses
Ottawa County, MI
UTM: 16 / 560700 / 4767220

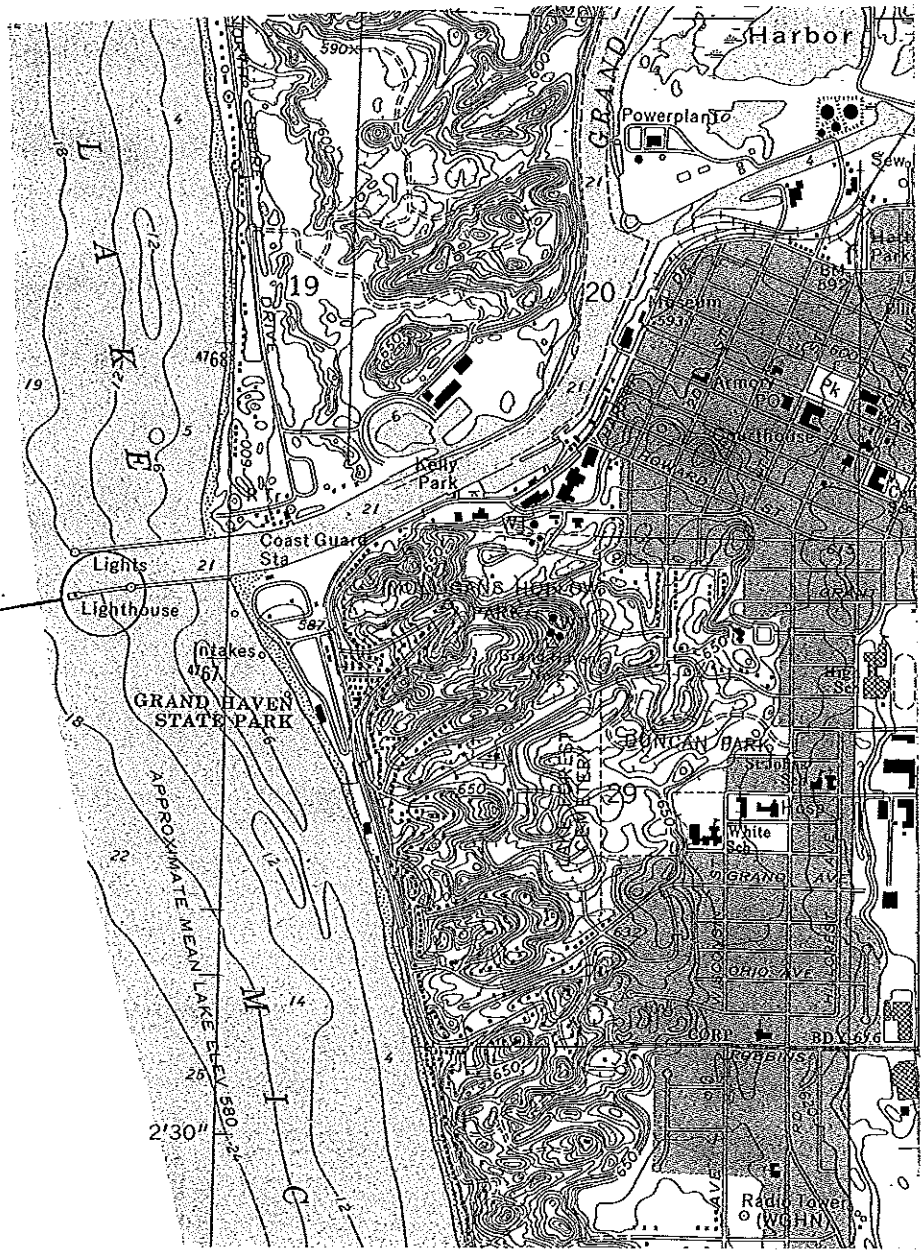

These are contemporary photographs of the Grand Haven South Pierhead Inner and Entrance Lighthouses near the City of Grand Haven in Ottawa County, Michigan.

Photographer: Timothy McGrath (# 1, 2, 3, 5, 6)
Gary Martin (# 4).
Date of photographs: 2004.
Original negatives on file at: U.S. Coast Guard Historian's Office, U.S. Coast Guard Headquarters, Washington, DC.

1. Entrance Lighthouse, Inner Lighthouse and Elevated Walkway, looking west from shore.

2. Inner Lighthouse and Elevated Walkway, looking east from Entrance Lighthouse.

3. Elevated Walkway and south pier, looking east from Inner Lighthouse lantern gallery.

4. Entrance Lighthouse west and north elevations, Inner Lighthouse in background, looking northeast.

5. Entrance Lighthouse east elevation and Elevated Walkway, looking west.

6. Entrance Lighthouse basement interior, looking west.

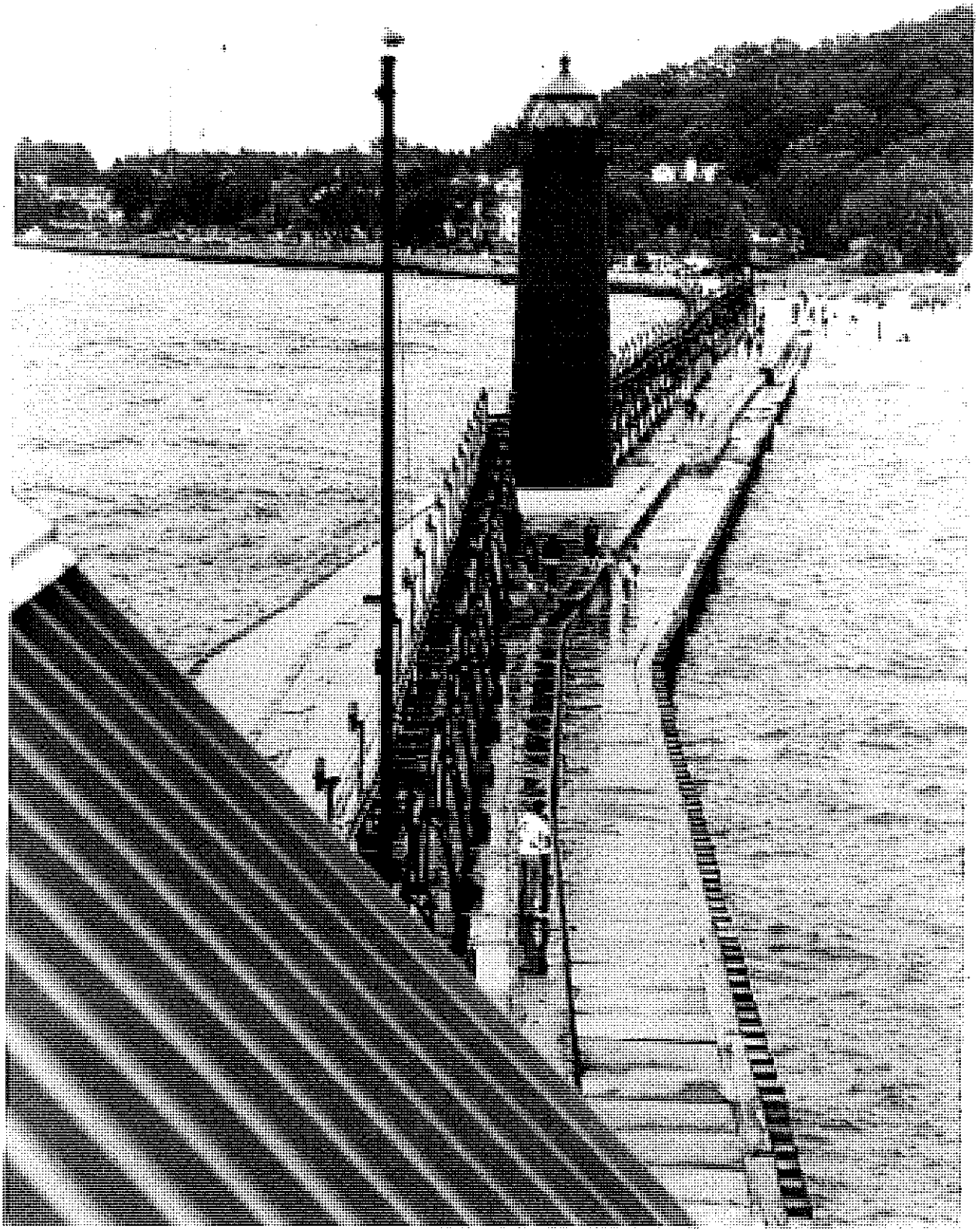

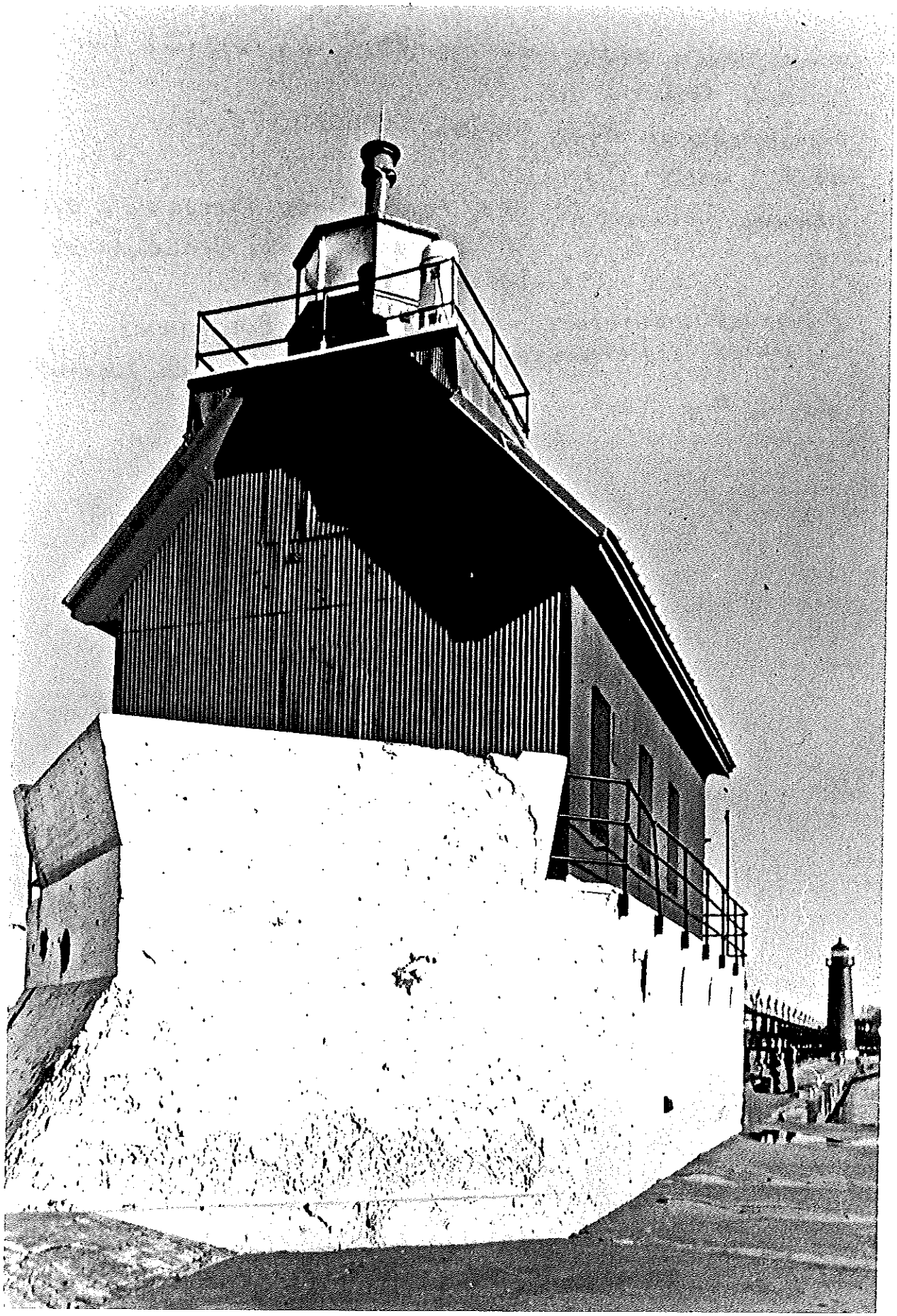

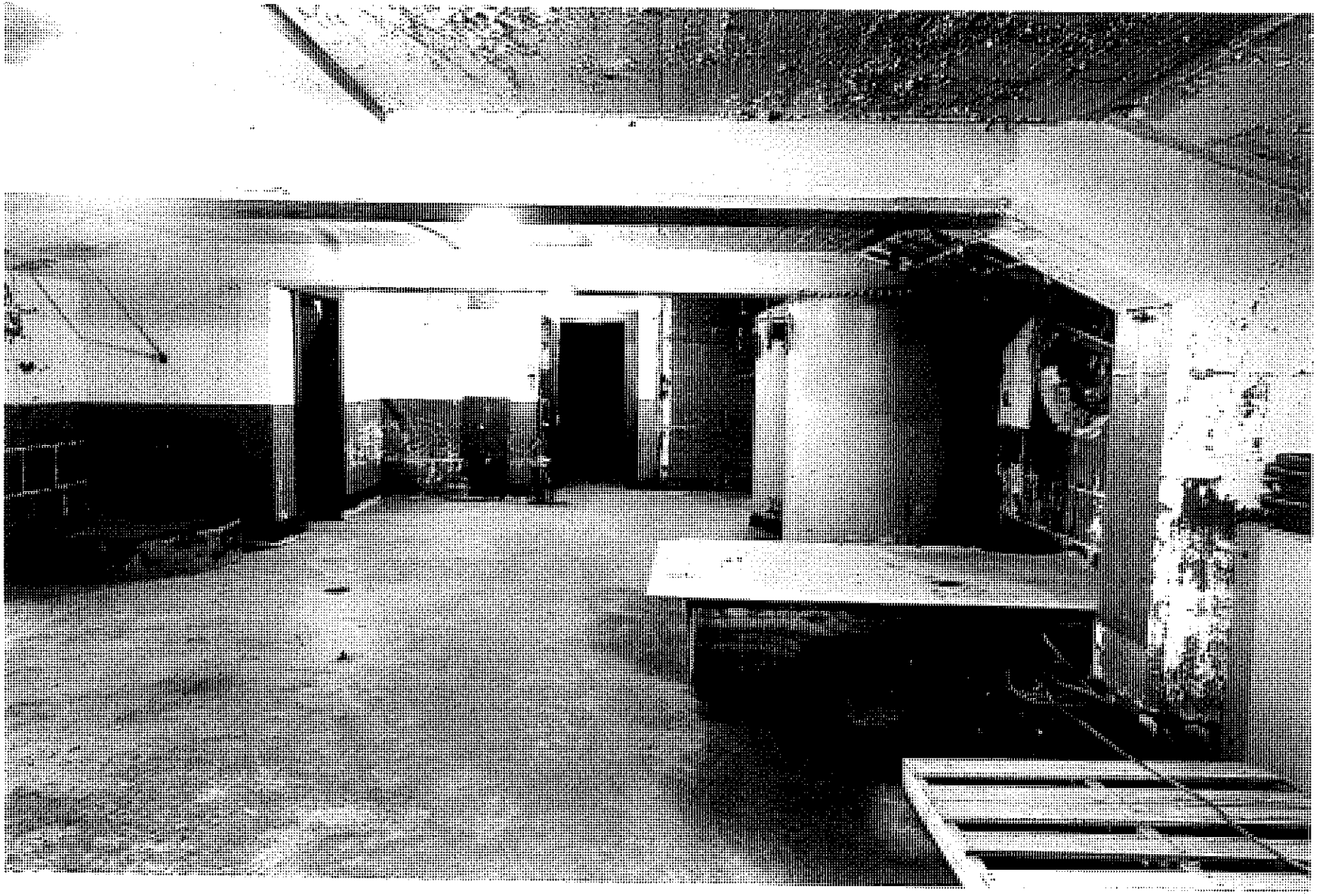

SUPPLEMENTARY LISTING RECORD

NRIS Reference Number: 95001161 Date Listed: 10/23/1995

Property Name: Piers and Revetments at grand haven, MI

County: Ottawa State: MI

This property is listed in the National Register of Historic Places in accordance with the attached nomination documentation subject to the following exceptions, exclusions, or amendments, notwithstanding the National Park Service certification included in the nomination documentation.

Signature of the Keeper

8/9/2010
Date of Action

fm

Amended Items in Nomination:

Section 5: Resource Count

The nomination is hereby amended to include three(3) contributing structures.

The original submission neglected to count or describe the Inner and Outer Pierhead lights, or the catwalk connecting them to the shore. The cast iron lights, constructed in 1905, and the steel catwalk are integral structures to the historic function and design of the piers.

The Michigan State Historic Preservation Office was notified of this amendment.

DISTRIBUTION:

National Register property file
Nominating Authority (without nomination attachment)

APPENDIX I

REFERENCES

The following references were used for the compilation of this report.

Ewing, Wallace K. and Seibold, David H., "Maritime Grand Haven, Coast Guard City USA," Arcadia Publishing, Charleston, South Carolina, 2006.

Grand Haven, City of, "Application to Obtain Historic Light Station Property, Grand Haven Entrance and Inner Lights, GSA Control No. 1-X-MI-818", March 2010.

Holland, F. Ross, "Great American Lighthouses," The Preservation Press, Washington, D.C., 1989.

Karpin, David G., USCG, Retired, "Condition Assessment Report, Grand Haven Entrance and Inner Lighthouses, Grand Haven, Michigan," Grand Haven Lighthouse Conservancy, October 15, 2009.

National Park, United States Coast Guard and Department of Defense, "Historic Lighthouse Preservation Handbook," U.S. Government Printing Office, Washington, D.C., 1997.

Pepper, Terry, "Seeing the Light – Lighthouses of the Western Great Lakes," Website: www.terrypepper.com.

Roach, Jerry, "The Ultimate Guide to Upper Michigan Lighthouses," Bugs Publishing, Durand, Michigan, 2007.

United States Coast Guard Historian's Office, "Historic Light Station Information and Photography," Website: www.uscg.mil/History/weblighthouses.